WOODWARD



SOLENOIDS







Solenoid Components for Control Systems

Solenoids • Solenoid Accessories • Solenoid Shutdown Kits

CUSTOM SOLUTIONS . . . . . PAGES 02–03

INNOVATIVE TECHNOLOGY . . . . . PAGES 04–05





SOLENOIDS . . . . . PAGES 06–34

Internally and externally switched solenoids for continuous duty operation in the most severe engine environments

- Solenoid Basics
- Dual Coil Solenoids
- Single Coil Solenoids




SOLENOID CONTROL ELECTRONICS . . . . PAGES 35–51

Solenoid protection products with either external or internal electronics to prevent overheating of pull coil

- Coil Commanders™
- Pull Coil Timer Modules
- Integrated Coil Electronics (ICE)
- Advanced ICE
- Hardware



SOLENOID SHUTDOWN KITS . . . . . PAGES 52–61

Fit a wide range of engines and fuel injection pump governors for running and stopping engines under all conditions

- RQV-K Bosch
- RSV Bosch
- Kubota 1A (62.2 mm)
- Kubota 3A (70 and 82 mm)
- Mitsubishi L
- RSV Zexel Nippondenso

TABLE OF CONTENTS

Custom Solutions

Engines run in hot, dirty places. In hazardous environments. In submerged conditions. For long continuous hours or for very intense intermittent times.

Woodward knows that your engine's control system has to work perfectly—no matter *where* that engine is running or *what* it is running. That's why OEMs team up with Woodward engineers when solenoids are key components of their control systems.

This collaboration results in components uniquely tailored for the job at hand.

Typical Custom Solutions for…

…Engine Control Systems

Woodward Air Valve Shutoff Solenoid

Diesel engine runaway, caused by the presence of combustible gases in engine intake air, can result in serious consequence. Woodward designed and manufactured a diesel engine air shutoff valve solenoid to eliminate intake air. The solenoid, built for an engine OEM, allows the safe operation of engines in hazardous environments.



Woodward Air Vent Control Solenoid

Railroad cars and refrigerated trucks hauling produce must combat the buildup of carbon dioxide in order to prevent the cargo from rot. Woodward designed and manufactured an air vent control solenoid that allows fresh air to flow over produce while being transported by train or truck.



Custom Solutions (continued)

Typical Custom Solutions for…

…Engine Brake Systems

Woodward Integrated Solenoid Valve

A compression release engine brake system reduces vehicle speed via an exhaust valve that allows pressure to escape instead of returning energy back to the piston. Woodward designed and manufactured a solenoid valve that opens and closes the brake system exhaust valve for an Asian OEM's new line of 224 kW to 299 kW (300 hp to 400 hp) on-highway diesel engines.



…Switchgear Controls

Woodward Bi-directional Solenoid

Electrical power switchgear requires a high force (445 N [100 lbf]), low stroke (6.35mm [1/4"]) motion to push a spring loaded switch over center to make and break a circuit. Woodward designed and manufactured a bi-directional solenoid to open or close the voltage switch on a vacuum capacitor switch.



…Locking Assemblies

Woodward Spool Lock Solenoid

Construction equipment runs in hot, dirty, high-vibration environments and needs rugged components as locking mechanisms. Woodward designed and manufactured a spool lock solenoid for a skid steer loader OEM that withstands 1500 lbs of side load resistance.



When solenoids are key components of *your* control systems, put Woodward on your design team. Contact your Woodward representative to learn more about our engine control solutions.

Innovative Technology



MagAssist™ Solenoid

Simplifies system requirements and connections

Woodward's new MagAssist™ solenoid delivers high return force with low power input, using less energy than typical dual-coil solenoids. Its patented, single-coil design uses a permanent magnet with bi-directional assist to achieve both pull and hold functions.

While de-energized, the solenoid plunger remains attracted to the permanent magnet to maintain position. When energized, the permanent magnet enhances the pull-in force.

By eliminating the need for high current switching or electronic switch assemblies, the MagAssist can significantly reduce system costs.

The MagAssist would be an ideal choice for an industrial, under-the-hood application where voltage is 12 Vdc; rated current is 2.6 A; stroke is approx 6mm (1/4"); and return force requirements are up to 20 N (4.5 lbf).

To see if the MagAssist would be ideal for your engine, contact Woodward with your specific requirements.



Features

- Eliminates high current switching
  - –Single, low power, continuous duty, pull coil winding
  - –Approx. 92% reduction in pull current (36.5 A [dual-coil] vs. 2.6 A [MagAssist])
- Low current requirements (typically 2.5 A operating current)
- Robust design withstands vibration of 20 Gs, 50–400 Hz
- Allows for unlimited cranking cycles without overheating the solenoid
- Increases available battery cold cranking amps (CCA)
- Unaffected by voltage transients

Typical Applications

- Diesel engine fuel shutoff
- Hydraulic valve shutoff
- Fluid pump shutoff
- Throttle, choke, valve, clutch, and overspeed protection assemblies

United States Patent 7280019 B2

WOODWARD

MagAssist Reduces Cost of Control Systems by Simplifying Components and Connections

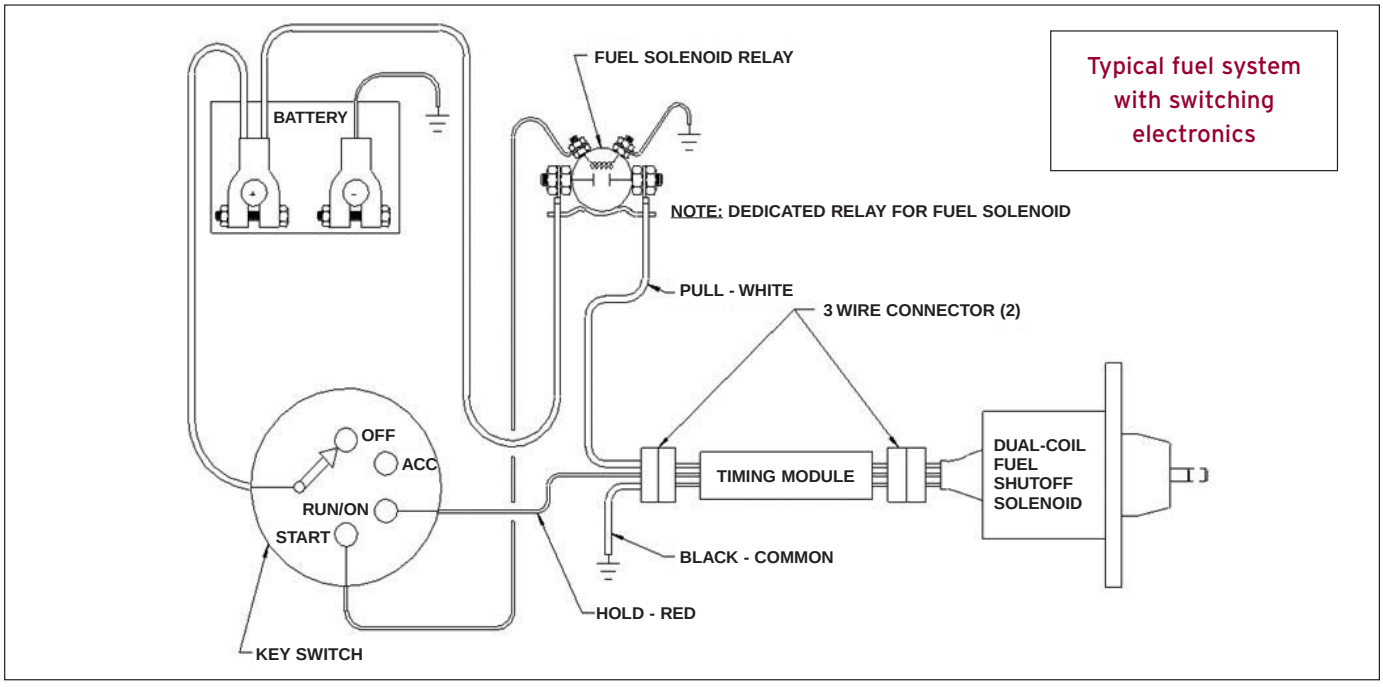

This fuel system uses a dual-coil solenoid with electronics for switching the pull and hold coils. It requires a dedicated relay for the fuel solenoid, a timing module with associated connections, and a dual-coil fuel shutoff solenoid.

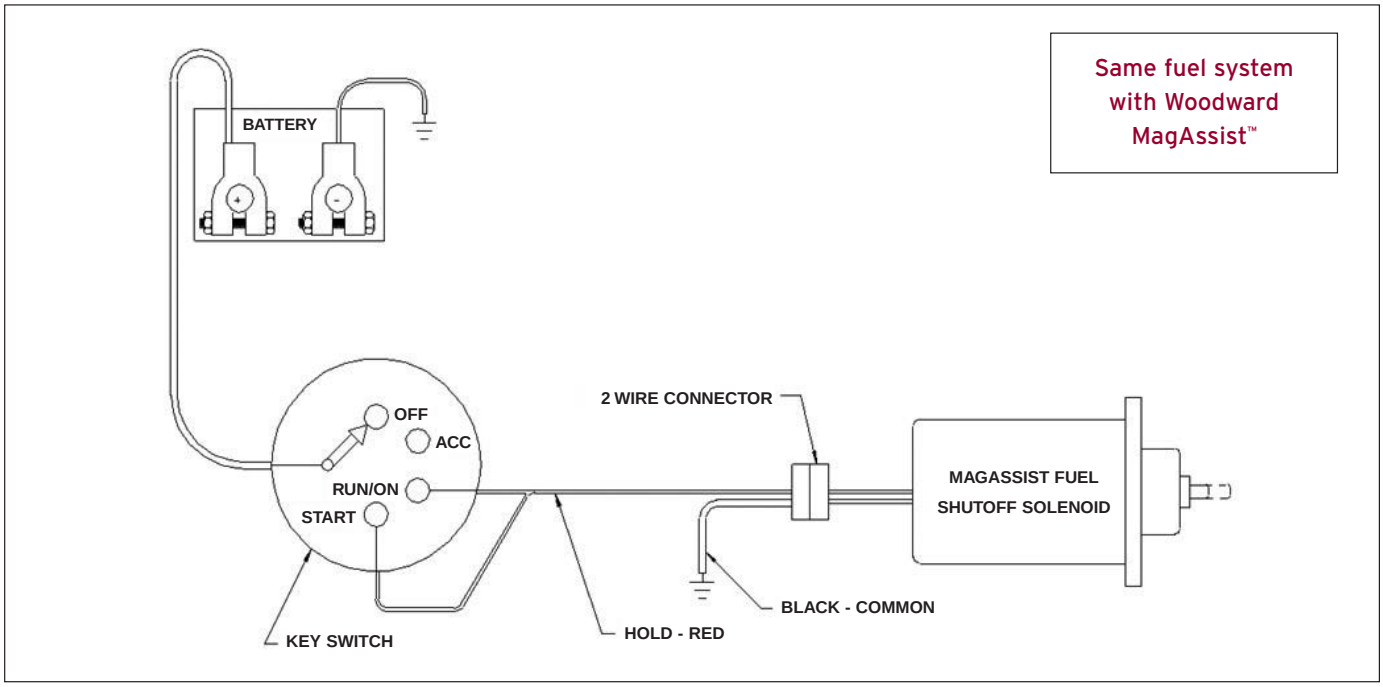

This fuel system uses a MagAssist solenoid which eliminates the need for switching electronics. The MagAssist will result in a reduction of total system costs and improved reliability.

Solenoid Basics

From operating engine run/stop levers, throttles, chokes, valves and clutches to protecting expensive diesel engines from overspeed, low lube pressure and high temperature, you can rely on Woodward solenoids to meet the ever-changing technical demands of modern industry.



The Basic Single Coil Solenoid

A solenoid is a device that converts electrical energy into mechanical work. Solenoids are made up of a free moving steel plunger that sits within a wound coil of copper wire. When electric current is introduced, a magnetic field forms, which draws the plunger in. The exposed end of the plunger can be attached to equipment, and when the solenoid is activated, the plunger will move to open, close, turn on or turn off that equipment.

The Woodward dual-coil Solenoid

To allow a solenoid to be held energized for long periods of time without overheating, Woodward uses two separate coil windings instead of one. The first wound coil operates at a high current level to provide maximum pull or push. The second wound coil simply holds the plunger in place after it has completed its stroke and "bottomed out." Since the current required to hold the plunger in place is low, dual-coil solenoids can be energized continuously without overheating. This unique design concept results in a highly efficient compact solenoid approximately one half the size of a comparable single coil unit.

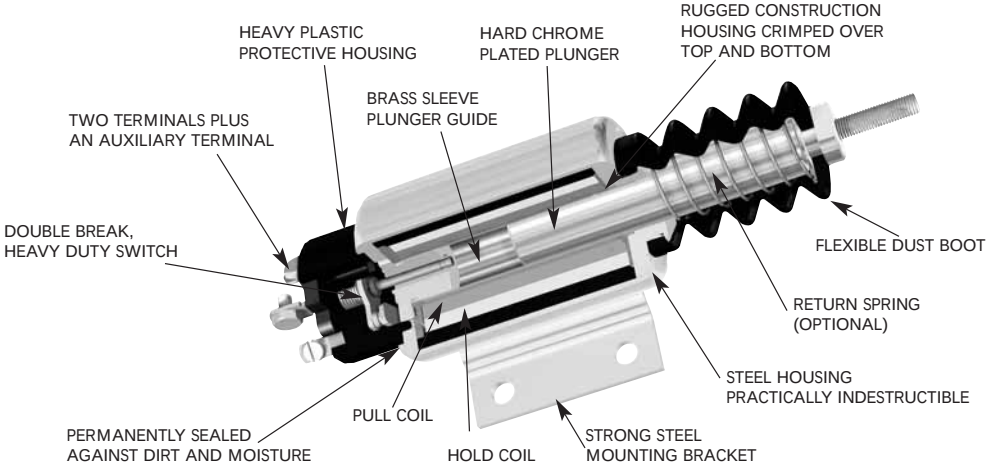

Three methods for turning off the pull coil

After energizing and pulling in the plunger, the pull coil in a dual-coil solenoid must be turned off as soon as possible to prevent overheating. The three basic methods for switching off the pull coil are discussed below.

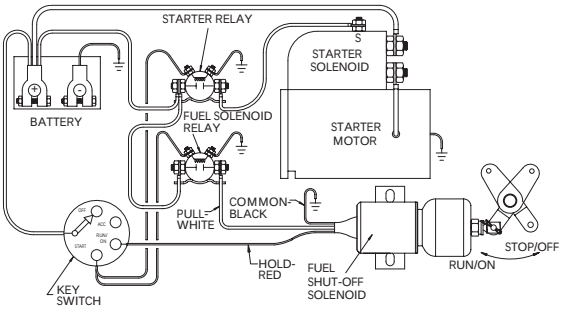

External Switching

The externally switched (3-wire) solenoid is used in applications where an operator/driver manually turns a key switch that temporarily energizes the pull coil to pull in the plunger. The most popular application is for start-stop control of engines in trucks and mobile equipment where moisture, dirt, dust, and high vibration are present. The sealed 3-wire solenoid is well suited for these harsh conditions.

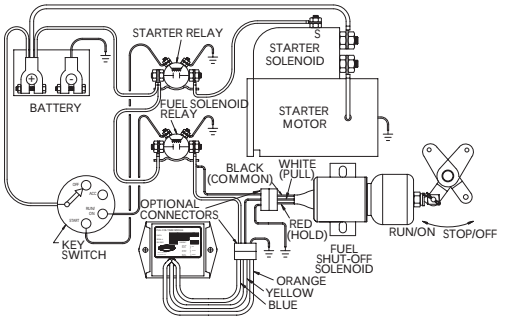

External Switching with Timer Module

With the addition of a Woodward pull coil timer module, the externally switched (3-wire) solenoid can be used not only in operator/driver controlled vehicles, but also in unattended equipment, throttle, and choke controls. The timer ensures that the pull coil is turned off within approximately 1 second after energizing, which prevents overheating of the coil in situations such as abusive overcranking of an engine.

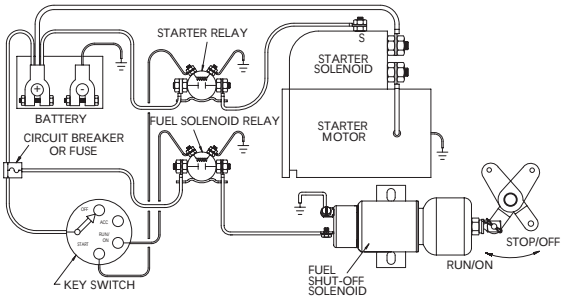

Internal Switching

The internally switched solenoid utilizes a mechanical double contact switch, mounted on the rear of the solenoid, to turn off the pull coil. Best suited for applications such as standby generator sets or other applications where vibration, dirt, moisture, and excessive cycling are not present.

Basics

Solenoid Selection Factors

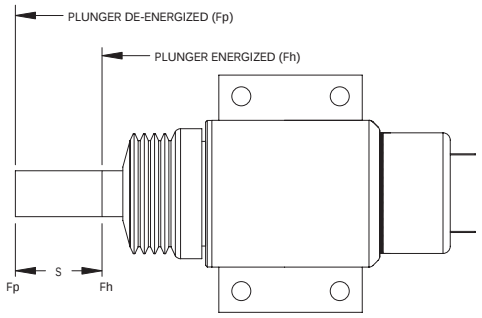

- The pull or push force (Fp) required to move the plunger and load from a de-energized or non-voltage position to an energized or voltage induced position.
- The force required to hold (Fh) the plunger and load in its energized or voltage induced position.
- The total distance or stroke (S) the plunger travels when the solenoid is energized.
- All solenoids are affected by temperature. The hotter the solenoid, the less work it can do because of changes in the resistance of the copper coil wire.
- Low voltage also reduces the solenoid's work output.

Evaluating Solenoid Suitability

To evaluate a solenoid's work output, use the accompanying "pull vs. stroke," "voltage" and "temperature" graphs and follow this example:

Let's assume your application requires a maximum pull force of 7 pounds at a 1 inch stroke. After looking at the "pull vs. stroke" graph, the solenoid you're considering (Model 1502) has a 9 pound pull force at 1 inch stroke. We'll represent this pull force with the letters (Fo). You know the solenoid is operating at 100% of rated voltage. A quick look at the voltage correction graph, which corrects for any extreme voltages, provides a 1.0 factor. We'll represent the voltage correction factor with the letters (fv). Your solenoid is located near the engine; therefore, the ambient temperature of 122˚F (50˚C) exceeds the normal 77˚F (25˚C) ambient. The temperature correction graph indicates a correction factor of .83 be used. We'll indicate the temperature correction factor with the letters (ft).

Using the formula: F = Fo x fv x ft *or* F = 9 x 1.0 x .83 = 7.47 lbs

Since the available solenoid force of 7.47 pounds is greater than your required pull force of 7 pounds, the solenoid is suitable for this particular application.

Measurements for above factors must be taken in operating conditions. For example: you must start the engine and measure the force to move the lever to the stop position. The engine governor often exerts force on the stop lever, which is not apparent on a stationary engine.

Solenoid Deration Graphs

Pull vs Stroke

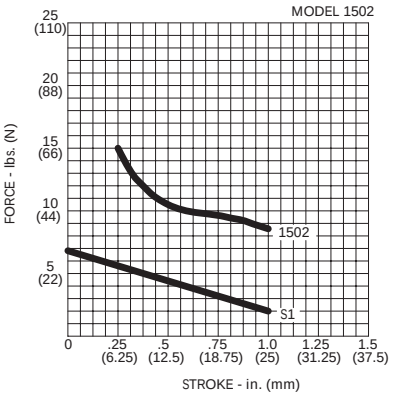

Voltage Correction (fv)

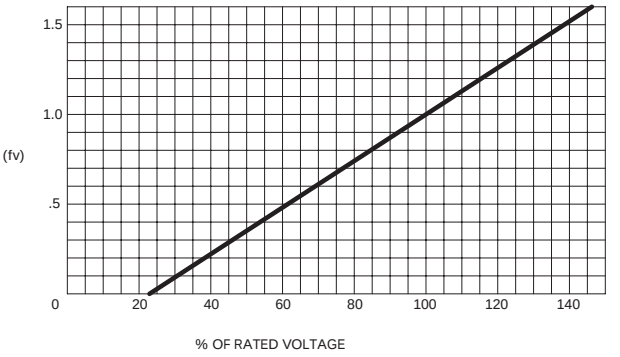

Temperature Correction (ft)

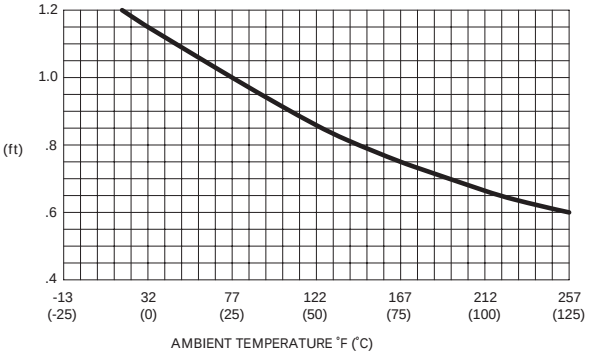

Return Spring Deration

In some cases, an optional spring is attached to ensure that the solenoid's de-energized plunger returns to its original position. For these applications, when using the "F = Fo x fv x ft" formula to determine the appropriate solenoid, remember: As the "pull vs. stroke" graph illustrates, the addition of a return spring changes the force (Fo) characteristics. When determining (Fo) for a solenoid with a return spring, refer to the appropriate line on the graph illustrating the return spring value (S1).

This value must be subtracted from the solenoid performance curve to assure adequate force is available under derated conditions. Using our original example, the solenoid pull force (Fo) for Model 1502 at full voltage, 122°F (50°C) and 1 inch stroke was calculated to be 7.47 lbs. This force must now be reduced by the 2 pounds required to begin compressing the optional return spring (S1) at one inch (see"Pull vs. Stroke" above). The available force has dropped to 5.47 lbs, far below the required 7 pounds for this application. Therefore, a solenoid model with a higher force rating such as the 1504 or 1753 would be required.

Basics

Solenoid Mounting

Location	Although the solenoid is designed to operate in harsh environments, locations with excessive heat build-up and constant exposure to liquid and particulate contaminants should be avoided.
Brackets	Must be sufficiently strong to handle solenoid pull forces, vibration and shock inherent in the application.
Alignment	The solenoid should be mounted to permit the plunger to be linked in a direct line to the load. Misalignment causes side loading and resulting friction reduces the solenoid's available force. Increasing the distance between the solenoid and the lever-actuating mechanism will reduce the force lost due to side loading friction.
Solenoid position	The solenoid should be oriented with the plunger pointed vertically down or at some downward angle. If the plunger is pointed up, contaminants may collect in the plunger bore, affecting long term operation.

Solenoid Linkage

The connecting link between the solenoid and its intended application is known as the solenoid linkage. For the internal switch to automatically disconnect the high current pull coil, solenoid linkage systems must allow the plunger to move completely into the solenoid body and "bottom out" without binding. Failure to "bottom out" will cause an internally switched solenoid to burn out and an externally switched solenoid to "drop out." Solenoid linkage can take several forms: A rod threaded at both ends, a bead chain, a cable, etc.

Rod	When a connecting rod is employed, the stroke is adjusted by turning the rod on its threads and locking the rod in place with a lock washer and nut. The solenoid should be energized during adjustment. A swivel joint should be incorporated with this type of linkage system to compensate for possible misalignment between the connecting rod and solenoid plunger.
Bead chain or cable	When linkage is in either of these forms, the solenoid should be energized and the bead chain or cable length adjusted to give the desired lever position.
Plunger travel	Plunger travel must be checked, especially when a bead chain or cable is used in a connecting device. The plunger travel must be limited to the solenoid's rated stroke when it is de-energized. An "L" bracket can be used to limit the plunger travel. (See diagram below.)

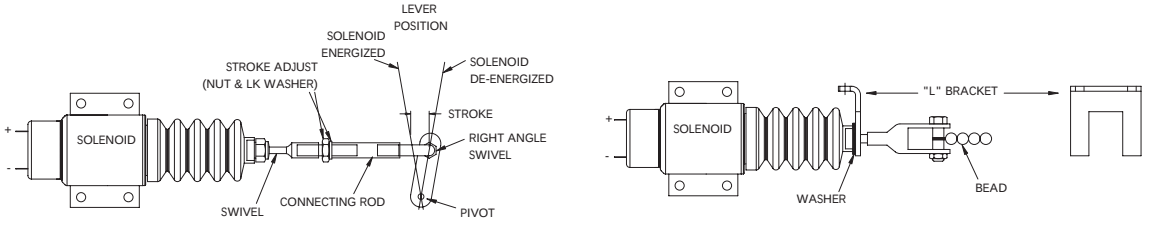

Solenoid Voltage

To minimize voltage loss and resulting solenoid force deration, this chart should be used to select the proper wire thickness based upon the total wire length from the battery to the solenoid and back to the battery.

	Solenoid Series 1502/1753/1757		Solenoid Series 1504/1751/1756/2001		Solenoid Series 2003/2370	
	Wire Length		Wire Length		Wire Length	
Voltage	12 VDC	24 VDC	12 VDC	24 VDC	12 VDC	24 VDC
Wire Thickness						
16 AWG/1.5 mm^2	–	–	–	21' (6.4 m)	–	–
14 AWG/2.5 mm^2	12' (3.7 m)	40' (12.2 m)	9' (2.7 m)	34' (10.4 m)	5' (1.5 m)	9' (2.7 m)
12 AWG/4.0 mm^2	19' (5.8 m)	64' (19.5 m)	14' (4.3 m)	54' (16.5 m)	9' (2.7 m)	14' (4.3 m)
10 AWG/6.0 mm^2	20' (6.1 m)	102' (31.1 m)	23' (7 m)	86' (26.2 m)	14' (4.3 m)	23' (7 m)

Solenoid Current

To protect solenoids from permanent overload damage, a well-designed system will include an overload protection device. This chart indicates proper fuse and circuit breaker ratings to incorporate into the wiring system.

	Solenoid Series 1502/1753/1757		Solenoid Series 1504/1751/1756/2001		Solenoid Series 2003/2370	
Voltage	12 VDC	24 VDC	12 VDC	24 VDC	24 VDC	24 VDC
Slow Blow Fuse Type 3AG	8A	6A	12A	7A	20A	10A
Breaker Amps Max	8A	6A	12A	7A	20A	10A

Solenoid Boots

Woodward solenoid boots are constructed of either epichlorohydrin (black boot) or silicone rubber (gray boot). Epichlorohydrin offers excellent resistance to oxygen, weather, fuels and oils. It is ideal for many automotive and off-road engine compartment applications. Silicone rubber is also resistant to most engine compartment chemicals with the advantage of retaining excellent flexibility at low temperatures and the ability to work well at high temperatures.

The boot type is either constant volume or bellows. Constant volume (CV) boots are designed so that the space inside the boot remains the same regardless of plunger position. With no change in volume there is no pressure buildup, which can reduce effective plunger force. A major benefit of the CV boot is that the boot can be totally sealed.

The bellows boot is necessary in longer stroke applications where the volume change is too great to be handled by a CV boot. The bellows boot typically has a small bleed hole in it so that air is not trapped on one side of the boot or the other, allowing the pressure to equalize. Therefore, the bellows boot is not a totally sealed design.

Solenoid Selection Guide

A guide to help you in the selection of Woodward's wide range of dual-coil solenoids



Woodward's innovative designs and advanced engineering technology provide distinct performance advantages:

- Dual coil design provides both a high and low resistance coil for continuous operation in the widest ambient temperature range
- Dual-coil solenoids pack more power in a smaller space than single coil solenoids
- Coils are potted on select models, sealing the entire unit for long, reliable service under extreme dirt and moisture conditions
- Plated steel housings and mounting brackets are corrosion resistant
- High temperature magnet wire insulation
- Hard chrome plated plunger for smooth, reliable, wear-resistant operation
- Brass plunger bore sleeve
- 100% inspected and factory tested

The true tests of solenoid excellence:

Vibration test:	15 to 2000 Hz @ 15 G's, 3 planes
Thermal cycling test:	-40˚F to +250˚F (-40˚C to +121˚C), 2 hours at each temperature with one hour transition, 25 cycles
Heat soak test:	3 hours @ 250˚F (121˚C) at 120% rated voltage
Shock test:	200 G's peak @ 21 Hz for 300 hours

Solenoid Selection Guide

Solenoid Overview Chart:

Dual Coil Model No.*	Direction Pull	Direction Push	Pull or Push Force	Hold Force	Stroke	Page No.
1502	√		10 lbs (44 N)	24 lbs (107 N)	1" (25.4 mm)	16
1502ES	√		10 lbs (44 N)	28 lbs (125 N)	1" (25.4 mm)	16
1504	√		12 lbs (53 N)	19 lbs (85 N)	1" (25.4 mm)	16
1751	√		24 lbs (107 N)	38 lbs (169 N)	1" (25.4 mm)	18
1751ES	√		25 lbs (111 N)	41 lbs (182 N)	1" (25.4 mm)	18
1753	√		19 lbs (85 N)	42 lbs (187 N)	1" (25.4 mm)	18
1753ES	√		20 lbs (89 N)	43 lbs (191 N)	1" (25.4 mm)	18
1756ES		√	26 lbs (116 N)	35 lbs (156 N)	1" (25.4 mm)	20
1756ESDB		√	20 lbs (89 N)	35 lbs (156 N)	1" (25.4 mm)	20
1757ES		√	20 lbs (89 N)	37 lbs (165 N)	1" (25.4 mm)	20
1757ESDB		√	16 lbs (71 N)	37 lbs (165 N)	1" (25.4 mm)	20
2001	√		21 lbs (93 N)	49 lbs (218 N)	1" (25.4 mm)	22
2001ES	√		22 lbs (98 N)	43 lbs (191 N)	1" (25.4 mm)	22
2003	√		26 lbs (116 N)	51 lbs (227 N)	1" (25.4 mm)	22
2003ES	√		29 lbs (129 N)	41 lbs (182 N)	1" (25.4 mm)	22
2370	√		37 lbs (165 N)	88 lbs (391 N)	1.5" (38.1 mm)	24
2370ES	√		39 lbs (173 N)	92 lbs (409 N)	1.5" (38.1 mm)	24
Cable Solenoid	√		29 lbs (129 N)	41 lbs (182 N)	0.96" (24.5 mm)	26

***All 12 Vdc/24 Vdc except where noted**

Notes

Dual Coil Solenoids









Features:

- Dual coil design for higher pull force in a smaller package than similar size single coil solenoid
- Customer-specified option to switch from high current "pull" operation to low current "hold" operation with internal mechanical switch or external electronic switch
- Hold coil provides continuous duty operation
- Hard chrome plated plunger and brass liner for smooth, reliable, wear-resistant operation, tested on one million cycles
- Corrosion resistant plated steel housing and mounting base/flange
- Choice of flange, threaded, or base mountings
- Electrical connections available with choice of screw or spade terminals, or wire/connectors
- Two different boot types available; bellows boot is tapered to eliminate expansion in tight spots; constant volume boot has no breather hole and so provides contaminant protection of the plunger and bore

1500 Series

Models 1502, 1502ES & 1504 dual coil solenoids

Pull Force Range: 10-12 lbs (44-53 N)

Hold Force Range: 19-28 lbs (85-125 N)



Model	Rated Voltage	Pull Rating*	Hold Rating*
1502	12/24 Vdc	10 lbs (44 N)	24 lbs (107 N)
1502ES	12/24 Vdc	10 lbs (44 N)	28 lbs (125 N)
1504	12/24 Vdc	12 lbs (53 N)	19 lbs (85 N)

***At rated voltage, 68°F (20°C), and 1" (25.4 mm) stroke**

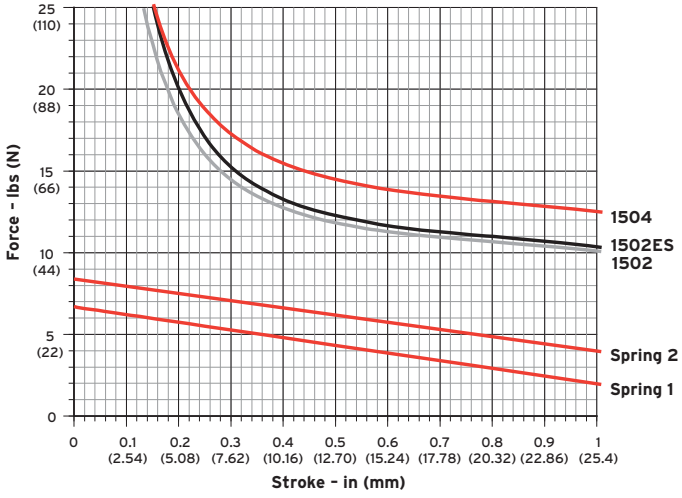

Return Spring

Model	Force @ 1"
S1 Light	2.0-6.7 lbs (8.9-29.8 N)
S2 Medium	4.0-8.4 lbs (17.8-37.4 N)

Order Information: Complete the following model descriptions to build your Order No.

( ) – ( ) ( ) ( ) ( ) ( ) ( ) ( )

Model No.

- **1502**
- **1502ES**
  Note: 1502ES offers Base Mounting, Ungrounded Terminals and Screw Type Termination only
- **1504**

Volts

- **12** 12 Vdc
- **24** 24 Vdc

Mounting Style

- **A** Flange
- **B** Thread
- **C** Base
- **D** Flange

Plunger Type

- **2** Ext. Thread ¼-28
- **3** Ext. Thread M-6
- **6** Int. Thread ¼-28
- **7** Int. Thread M-6

Grounding (No. of Terminals)

- **G** Grounded (1 Terminal)
- **U** Ungrounded
  1502 and 1504: (2 Terminals)
  1502ES: (3 Terminals or Wire Leads)

Termination Type

- **1** Screw
- **2** Spade
- **L** 3 Wire Leads

Boot Type

- **B1** Constant Volume Epichlorohydrin
- **B2** Bellows Silicone Rubber
- **B4** Bellows Silicone Rubber
- **B5** Constant Volume Silicone Rubber

Return Spring (Force @ 1")

- **S1** Light (2.0-6.7 lbs)
- **S2** Medium (4.0-8.4 lbs)

When you order: Add A to your order number for the Aux Terminal option available on internally switched models. Certain combinations may not be standard models. Please contact factory to determine whether a custom-built model is required for your application.

Mounting Styles:

MOUNTING STYLE A

Flange Mount

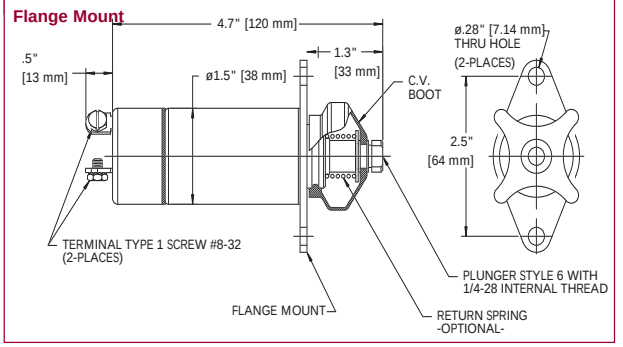

MOUNTING STYLE B

Threaded Mount

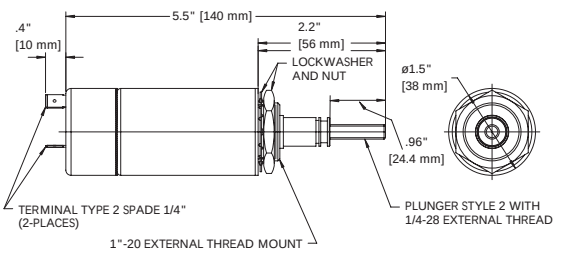

MOUNTING STYLE C

Base Mount

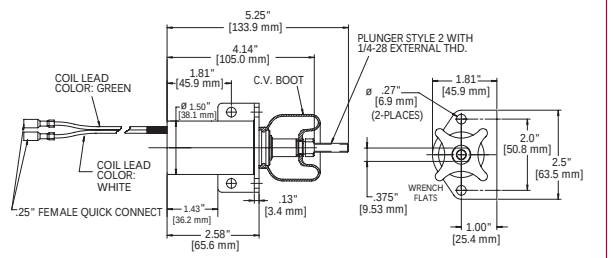

MOUNTING STYLE D

Flange Mount

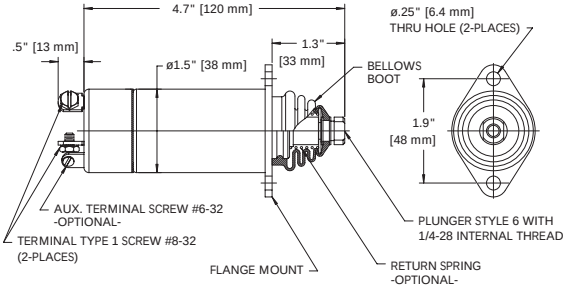

Specifications:

Temperature Range	-40˚F to +250˚F (-40˚C to +121˚C)
Weight	1.0 lbs (0.5 kg)

Model	Rated Voltage	Rated Stroke	Pull Current	Hold Current	Pull Rating*	Hold Rating*	Coil Winding
1502	12 Vdc	1" (25.4 mm)	30 A	0.7 A	10 lbs (44 N)	24 lbs (107 N)	Parallel
1502	24 Vdc	1" (25.4 mm)	16 A	0.24 A	10 lbs (44 N)	24 lbs (107 N)	Parallel
1502ES	12 Vdc	1" (25.4 mm)	30 A	0.7 A	10 lbs (44 N)	28 lbs (125 N)	Parallel
1502ES	24 Vdc	1" (25.4 mm)	16 A	0.24 A	10 lbs (44 N)	28 lbs (125 N)	Parallel
1504	12 Vdc	1" (25.4 mm)	41 A	0.76 A	12 lbs (53 N)	19 lbs (85 N)	Parallel
1504	24 Vdc	1" (25.4 mm)	22 A	0.37 A	12 lbs (53 N)	19 lbs (85 N)	Parallel

***At rated voltage, 68ºF (20ºC), and 1" (25.4 mm) stroke**

Specifications are for reference only.

1750 Series

Models 1751, 1751ES, 1753 & 1753ES dual coil solenoids

Pull Force Range: 19-25 lbs (85-111 N)

Hold Force Range: 38-43 lbs (169-191 N)



Model	Rated Voltage	Pull Rating*	Hold Rating*
1751	12/24 Vdc	24 lbs (107 N)	38 lbs (169 N)
1751ES	12/24 Vdc	25 lbs (111 N)	41 lbs (182 N)
1753	12/24 Vdc	19 lbs (85 N)	42 lbs (187 N)
1753ES	12/24 Vdc	20 lbs (89 N)	43 lbs (191 N)

*At rated voltage, 68°F (20°C), and 1" (25.4 mm) stroke

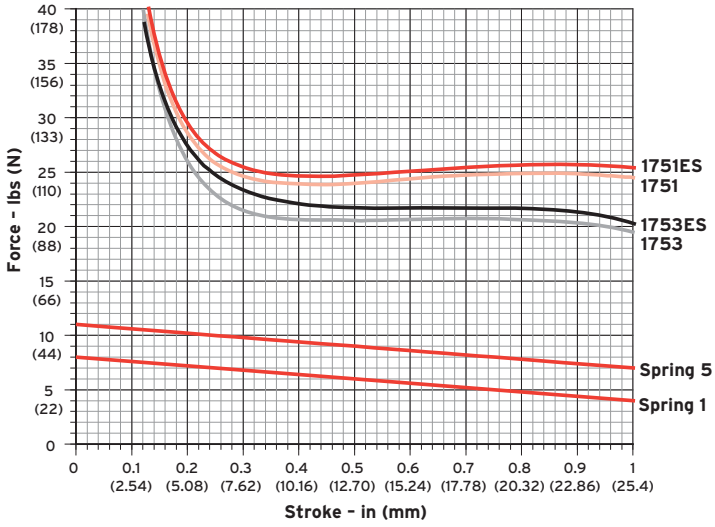

Return Spring

Model	Force @ 1"
S1 Light	4-8 lbs (17.8-35.6 N)
S5 Medium	7-11 lbs (31.1-48.9 N)

Order Information: Complete the following model descriptions to build your Order No.

( ) – ( ) ( ) ( ) ( ) ( ) ( ) ( )

Model No.
- **1751**
- **1751ES**
- **1753**
- **1753ES**

Volts
- **12** — 12 Vdc
- **24** — 24 Vdc

Mounting Style
- **A** — Flange
- **E** — Base

Plunger Type
- **2** — Ext. Thread ¼-28
- **3** — Ext. Thread M-6
- **6** — Int. Thread ¼-28
- **7** — Int. Thread M-6

Grounding (No. of Terminals)
- **U** — Ungrounded
  1751 and 1751ES: (3 Terminals or Wire Leads)
  1751, 1753 and 1753ES: (2 Terminals)

Termination Type
- **1** — Screw (1751 and 1753 only)
- **2** — Spade (1751 and 1753 only)
- **L** — 3 Wire Leads
- **C** — Connector attached to 3 Wire Leads

Note: Contact factory for type and availability

Boot Type
- **B1** — Constant Volume Silicone Rubber
- **B2** — Bellows Silicone Rubber
- **B4** — Bellows Silicone Rubber

Return Spring (Force @ 1")
- **S1** — Light (4-8 lbs)
- **S5** — Medium (7-11 lbs) Available on 1751 and 1751ES only

When you order: Add A to your order number for the Aux Terminal option available on internally switched models. Certain combinations may not be standard models. Please contact factory to determine whether a custom-built model is required for your application.

Mounting Styles:

MOUNTING STYLE A

Flange Mount

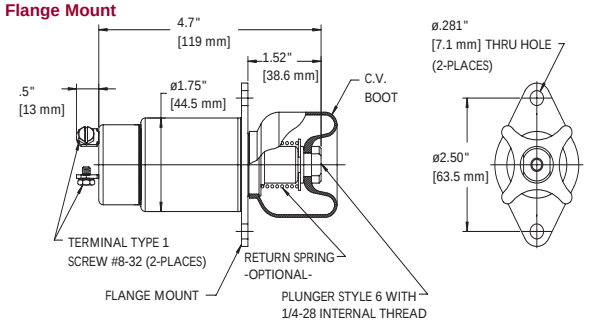

MOUNTING STYLE A

Flange Mount / External Switch

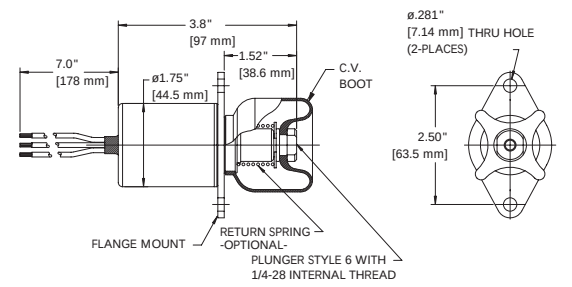

MOUNTING STYLE E

Base Mount

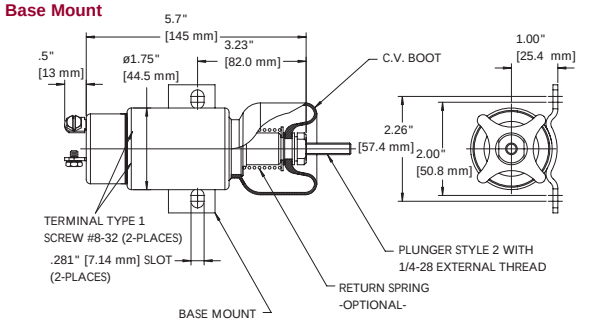

MOUNTING STYLE E

Base Mount / External Switch

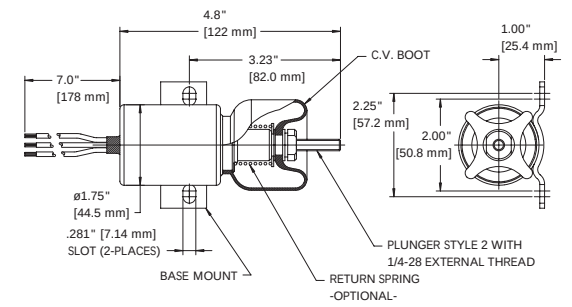

Specifications:

Temperature Range	-40˚F to +250˚F (-40˚C to +121˚C)
Weight	1.5 lbs (0.7 kg)

Model	Rated Voltage	Rated Stroke	Pull Current	Hold Current	Pull Rating*	Hold Rating*	Coil Winding
1751	12 Vdc	1" (25.4 mm)	46 A	1.1 A	24 lbs (107 N)	38 lbs (169 N)	Parallel
1751	24 Vdc	1" (25.4 mm)	25 A	0.5 A	24 lbs (107 N)	38 lbs (169 N)	Parallel
1751ES	12 Vdc	1" (25.4 mm)	46 A	1.1 A	25 lbs (111 N)	41 lbs (182 N)	Parallel
1751ES	24 Vdc	1" (25.4 mm)	25 A	0.5 A	25 lbs (111 N)	41 lbs (182 N)	Parallel
1753	12 Vdc	1" (25.4 mm)	33 A	0.8 A	19 lbs (85 N)	42 lbs (187 N)	Parallel
1753	24 Vdc	1" (25.4 mm)	18 A	0.4 A	19 lbs (85 N)	42 lbs (187 N)	Parallel
1753ES	12 Vdc	1" (25.4 mm)	33 A	0.8 A	20 lbs (89 N)	43 lbs (191 N)	Parallel
1753ES	24 Vdc	1" (25.4 mm)	18 A	0.4 A	20 lbs (89 N)	43 lbs (191 N)	Parallel

***At rated voltage, 68ºF (20ºC), and 1" (25.4 mm) stroke**

Specifications are for reference only.

1750 Push Series

Models 1756ES, 1756ESDB, 1757ES & 1757ESDB dual coil solenoids.
Externally switched push models available with double boot
Push Force Range: 16-26 lbs (71-116 N)
Hold Force Range: 35-37 lbs (156-165 N)



Model	Rated Voltage	Push Rating*	Hold Rating*
1756ES	12/24 Vdc	26 lbs (116 N)	35 lbs (156 N)
1756ESDB	12/24 Vdc	20 lbs (89 N)	35 lbs (156 N)
1757ES	12/24 Vdc	20 lbs (89 N)	37 lbs (165 N)
1757 ESDB	12/24 Vdc	16 lbs (71 N)	37 lbs (165 N)

*At rated voltage, 68°F (20°C), and 1" (25.4 mm) stroke

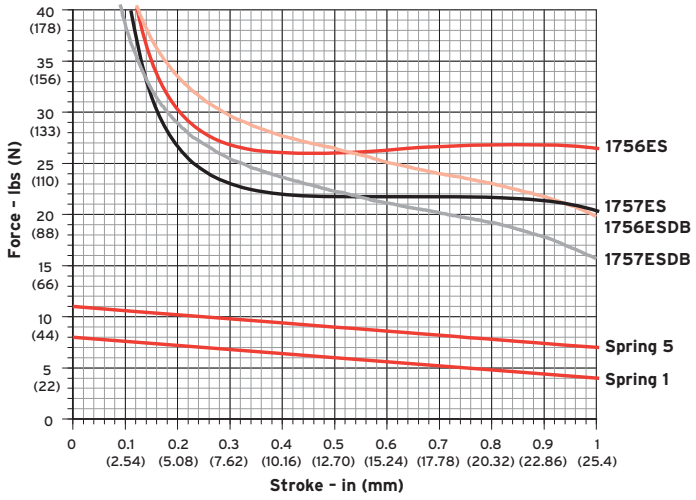

Return Spring

Model	Force @ 1"
S1 Light	4-8 lbs (17.8-35.6 N)
S5 Medium	7-11 lbs (31.1-48.9 N)

Order Information: Complete the following model descriptions to build your Order No.

( ) – ( ) ( ) ( ) ( ) ( ) ( ) ( )

Model No.
- **1756ES**
- **1756 ESDB**
- **1757ES**
- **1757 ESDB**

Volts
- **12** 12 Vdc
- **24** 24 Vdc

Mounting Style
- **A** Flange
- **E** Base

Plunger Type
- **2** Ext. Thread ¼-28
- **3** Ext. Thread M-6

Grounding (No. of Terminals)
- **U** Ungrounded (3 Terminals or Wire Leads)

Termination Type
- **L** 3 Wire Leads
- **C** Connector attached to 3 Wire Leads
  Note: Contact factory for type and availability

Boot Type
- **B1** Constant Volume
  Silicone Rubber
  Not available on ESDB models
- **B2** Bellows
  Silicone Rubber
- **B4** Bellows
  Silicone Rubber

Return Spring (Force @ 1")
- **S1** Light
  (4-8 lbs)
- **S5** Medium
  (7-11 lbs)
  Available on 1756ES and 1756ESDB only

When you order: Certain combinations may not be standard models. Please contact factory to determine whether a custom-built model is required for your application.

1750 Push Series

Mounting Styles:

MOUNTING STYLE A

Flange Mount / External Switch

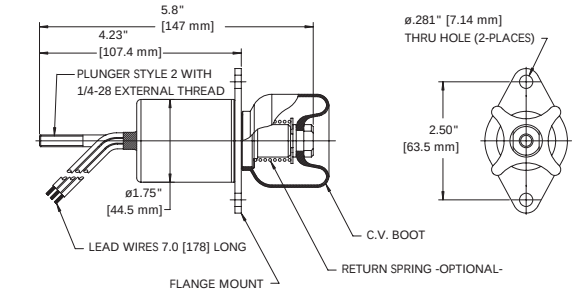

MOUNTING STYLE A

Flange Mount / External Switch, Double Boot

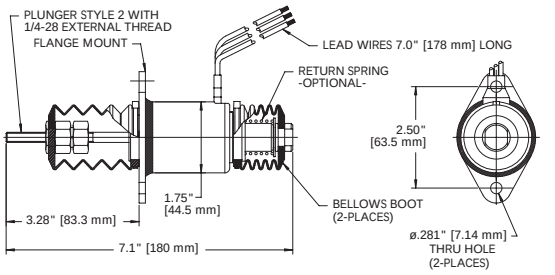

MOUNTING STYLE E

Base Mount / External Switch

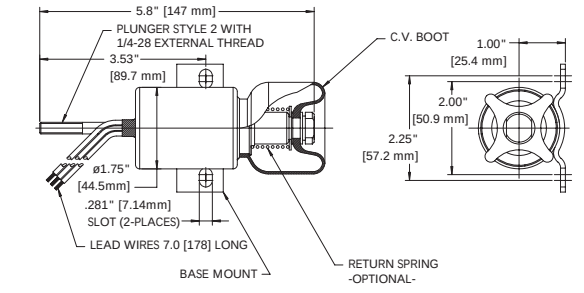

MOUNTING STYLE E

Base Mount / External Switch, Double Boot

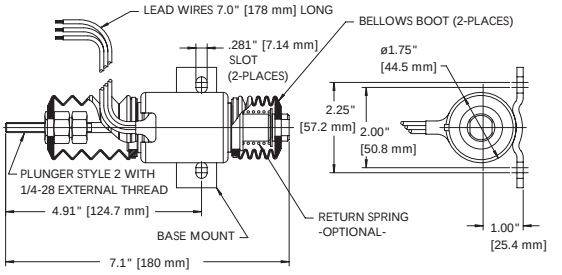

Specifications:

Temperature Range	-40˚F to +250˚F (-40˚C to +121˚C)
Weight	1.5 lbs (0.7 kg)

Model	Rated Voltage	Rated Stroke	Push Current	Hold Current	Push Rating*	Hold Rating*	Coil Winding
1756ES	12 Vdc	1" (25.4 mm)	46 A	1.1 A	26 lbs (116 N)	35 lbs (156 N)	Parallel
1756ES	24 Vdc	1" (25.4 mm)	25 A	0.5 A	26 lbs (116 N)	35 lbs (156 N)	Parallel
1756ESDB	12 Vdc	1" (25.4 mm)	46 A	1.1 A	20 lbs (89 N)	35 lbs (156 N)	Parallel
1756ESDB	24 Vdc	1" (25.4 mm)	25 A	0.5 A	20 lbs (89 N)	35 lbs (156 N)	Parallel
1757ES	12 Vdc	1" (25.4 mm)	33 A	0.8 A	20 lbs (89 N)	37 lbs (165 N)	Parallel
1757ES	24 Vdc	1" (25.4 mm)	18 A	0.4 A	20 lbs (89 N)	37 lbs (165 N)	Parallel
1757ESDB	12 Vdc	1" (25.4 mm)	33 A	0.8 A	16 lbs (71 N)	37 lbs (165 N)	Parallel
1757ESDB	24 Vdc	1" (25.4 mm)	18 A	0.4 A	16 lbs (71 N)	37 lbs (165 N)	Parallel

***At rated voltage, 68ºF (20ºC), and 1" (25.4 mm) stroke**

Specifications are for reference only.

2000 Series

Models 2001, 2001ES, 2003, 2003ES dual coil solenoids

Pull Force Range: 21-29 lbs (93-129 N)

Hold Force Range: 41-51 lbs (182-227 N)



Model	Rated Voltage	Pull Rating*	Hold Rating*
2001	12/24 Vdc	21 lbs (93 N)	49 lbs (218 N)
2001ES	12/24 Vdc	22 lbs (98 N)	43 lbs (191 N)
2003	12/24 Vdc	26 lbs (116 N)	51 lbs (227 N)
2003ES	12/24 Vdc	29 lbs (129 N)	41 lbs (182 N)

***At rated voltage, 68°F (20°C), and 1" (25.4 mm) stroke**

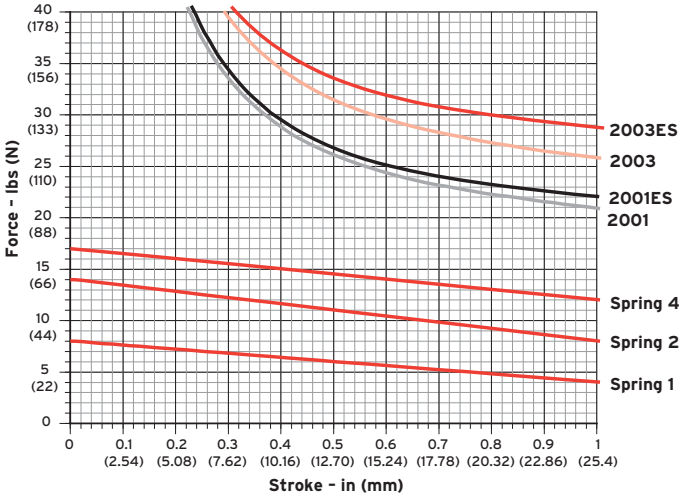

Return Spring

Model	Force @ 1"
S1 Light	4-8 lbs (17.8-35.6 N)
S2 Medium	8-14 lbs (35.6-62.3 N)
S4 Heavy	14-17 lbs (62.3-75.6 N)

Order Information: Complete the following model descriptions to build your Order No.

( ) – ( ) ( ) ( ) ( ) ( ) ( ) ( )

Model No.
- **2001**
- **2003**
- **2001ES**
- **2003ES**

Volts
- **12** 12 Vdc
- **24** 24 Vdc

Mounting Style
- **E** Base
- **S*** Flange

Plunger Type
- **2** Ext. Thread 1/4-28
- **3** Ext. Thread M-6
- **6** Int. Thread 1/4-28
- **7** Int. Thread M-6

Grounding (No. of Terminals)
- **G** Grounded (1 Terminal)
- **U** Ungrounded
  2001 and 2003: (2 Terminals)
  2001ES and 2003ES: (3 Terminals or Wire Leads)

Termination Type
- **1** Screw
- **L** 3 Wire Leads
  Note: 2001ES and 2003ES only
- **C** Connector attached to 3 Wire Leads
  Note: Contact factory for type and availability. 2001ES and 2003ES only

Boot Type
- **B1** Constant Volume Silicone Rubber
- **B2** Bellows Silicone Rubber
- **B3** Constant Volume Silicone Rubber Red
- **B4** Bellows Silicone Rubber
- **B5** Constant Volume Silicone Rubber

Return Spring (Force @ 1")
- **S1** Light (4-8 lbs)
- **S2** Medium (8-14 lbs)
- **S4** Heavy (12-17 lbs) Available on 2003 and 2003ES only

***Flange mounting not available for ES models.**

When you order: Add A to your order number for the Aux Terminal option or C for the Conduit Cover available on internally switched models. Certain combinations may not be standard models. Please contact factory to determine whether a custom-built model is required for your application.

Mounting Styles:

MOUNTING STYLE E

Base Mount

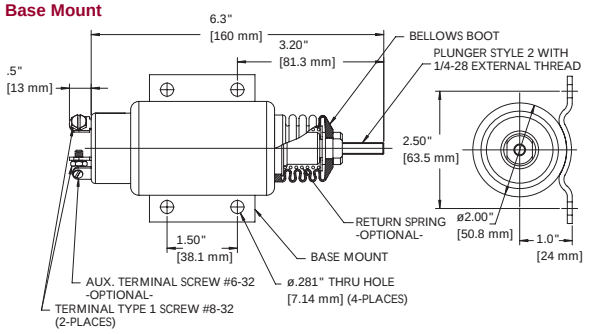

MOUNTING STYLE E

Base Mount / External Switch

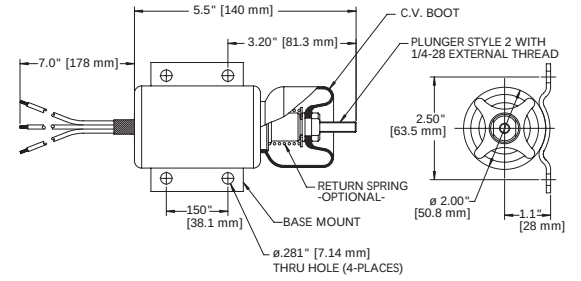

MOUNTING STYLE S

Flange Mount

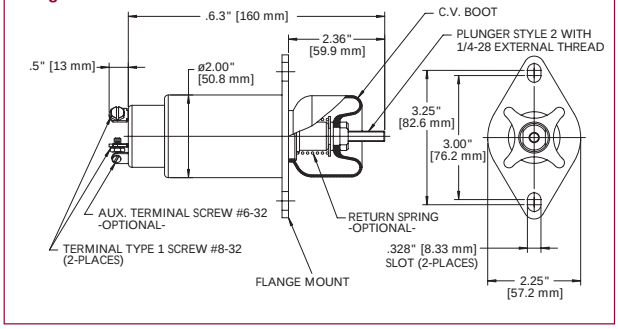

Specifications:

Temperature Range	-40˚F to +250˚F (-40˚C to +121˚C)
Weight	2.5 lbs (1.2 kg)

Model	Rated Voltage	Rated Stroke	Pull Current	Hold Current	Pull Rating*	Hold Rating*	Coil Winding
2001	12 Vdc	1" (25.4 mm)	44 A	0.6 A	21 lbs (93 N)	49 lbs (218 N)	Series
2001	24 Vdc	1" (25.4 mm)	23 A	0.3 A	21 lbs (93 N)	49 lbs (218 N)	Series
2001ES	12 Vdc	1" (25.4 mm)	44 A	0.6 A	22 lbs (98 N)	43 lbs (191 N)	Parallel
2001ES	24 Vdc	1" (25.4 mm)	23 A	0.3 A	22 lbs (98 N)	43 lbs (191 N)	Parallel
2003	12 Vdc	1" (25.4 mm)	60 A	0.8 A	26 lbs (116 N)	51 lbs (227 N)	Series
2003	24 Vdc	1" (25.4 mm)	37 A	0.4 A	26 lbs (116 N)	51 lbs (227 N)	Series
2003ES	12 Vdc	1" (25.4 mm)	62 A	0.9 A	29 lbs (129 N)	41 lbs (182 N)	Parallel
2003ES	24 Vdc	1" (25.4 mm)	39 A	0.5 A	29 lbs (129 N)	41 lbs (182 N)	Parallel

***At rated voltage, 68ºF (20ºC), and 1" (25.4 mm) stroke**

Specifications are for reference only.

2370 Series

Models 2370 and 2370ES dual coil solenoids

Pull Force Range: 37-39 lbs (165-173 N)

Hold Force Range: 88-92 lbs (391-409 N)



Model	Rated Voltage	Pull Rating*	Hold Rating*
2370	12/24 Vdc	37 lbs (165 N)	88 lbs (391 N)
2370ES	12/24 Vdc	39 lbs (173 N)	92 lbs (409 N)

***At rated voltage, 68°F (20°C) and 1.5" (38.1 mm) stroke**

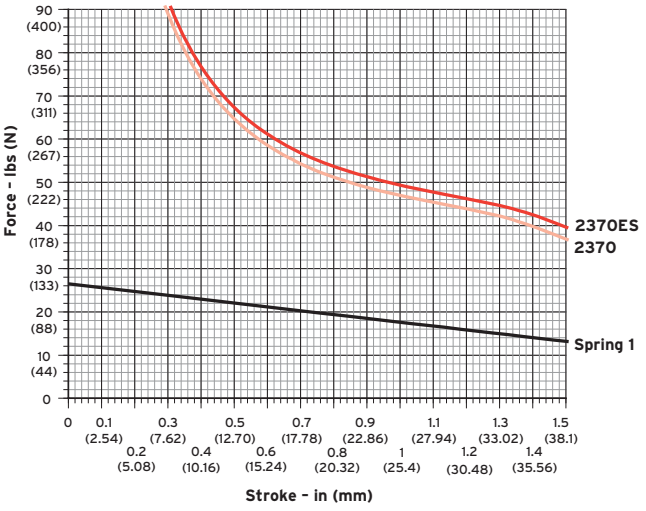

Return Spring

Model	Force @ 1"
S1 Light	17.6-26.0 lbs (78.3-115.7 N)

Order Information: Complete the following model descriptions to build your Order No.

( ) – ( ) ( ) ( ) ( ) ( ) ( ) ( )

Model No.
- **2370**
- **2370ES**

Volts
- **12** 12 Vdc
- **24** 24 Vdc

Mounting Style
- **E** Base

Plunger Type
- **2** Ext. Thread 5/16-24
- **3** Ext. Thread M-8 x 1.25
- **6** Int. Thread 5/16-24
- **7** Int. Thread M-8 x 1.25

Grounding (No. of Terminals)
- **G** Grounded (1 Terminal)
- **U** Ungrounded
  2370: (2 Terminals)
  2370ES: (3 Terminals or Wire Leads)

Termination Type
- **1** #8 Screw
- **3** #8 Stud
- **6** #10 Stud
- **L** 3 Wire Leads
- **C** Connector attached to 3 Wire Leads
  Note: Contact factory for type and availability

Boot Type
- **B2** Bellows
  Epichlorohydrin
- **B5** Constant Volume
  Silicone Rubber

Return Spring (Force @ 1")
- **S1** Light
  (17.6-26.0 lbs)

When you order: Add A to your order number for the Aux Terminal option available on internally switched models. Certain combinations may not be standard models. Please contact factory to determine whether a custom-built model is required for your application.

Mounting Styles:

MOUNTING STYLE E

Base Mount

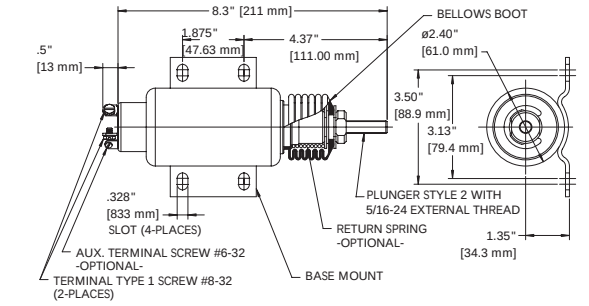

MOUNTING STYLE E

Base Mount / External Switch

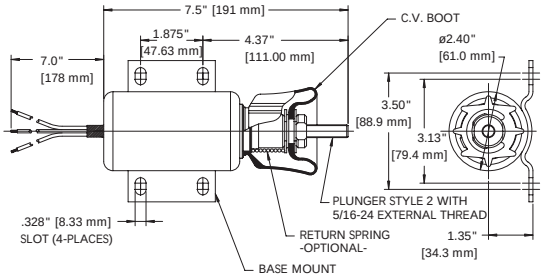

Specifications:

Temperature Range	-40˚F to +250˚F (-40˚C to +121˚C)
Weight	5 lbs (2.3 kg)

Model	Rated Voltage	Rated Stroke	Pull Current	Hold Current	Pull Rating*	Hold Rating*	Coil Winding
2370	12 Vdc	1.5" (38.1 mm)	58 A	1.7 A	37 lbs (165 N)	88 lbs (391 N)	Series
2370	24 Vdc	1.5" (38.1 mm)	31 A	0.6 A	37 lbs (165 N)	88 lbs (391 N)	Series
2370ES	12 Vdc	1.5" (38.1 mm)	58 A	1.7 A	39 lbs (173 N)	92 lbs (409 N)	Parallel
2370ES	24 Vdc	1.5" (38.1 mm)	31 A	0.6 A	39 lbs (173 N)	92 lbs (409 N)	Parallel

***At rated voltage, 68ºF (20ºC) and 1.5" (38.1 mm) stroke**

Specifications are for reference only.

Cable Solenoid

Patented, remote cable link solenoid can be used for throttle advance or shutdown requirements. Ideal for applications with space restrictions, extremely hot environments or excessive vibration.



Features:

- Remote mount for installation away from constrained or hostile environments
- Assembled with Model 2003ES high-force solenoid
- 8-14 pound return spring standard for start/stop applications.
- Heavy-duty cable withstands temperature ranges of -63˚F to +250˚F (-53˚C to +121˚C)
- Spherical rod end with 0.237" (6 mm) diameter hole
- Corrosion resistant plated steel housing and mounting
- Coils are potted to seal entire solenoid for reliable service under extreme vibration, temperature, dirt, and moisture conditions
- Options include connectors, flexible conduit over leads, and Coil Commander™ solenoid protection modules
- Patented

Solenoid Model 2003ES Features:

- 12 or 24 Vdc
- Base mount
- Ungrounded 3-wire leads
- Return spring 8 lbs (3.6 kg) at rated voltage, 68˚F (20˚C) and 1" (25.4 mm) stroke

Order Information:

ORDER NO.	Voltage
SA-4744-12	12 Vdc
SA-4744-24	24 Vdc

E.E.C. Directive Compliance: All parts supplied by Woodward are classified as components, and therefore are not "CE" marked. Please contact factory direct for details on specific product compliance with 89/336/EEC and 89/392/EEC directives.

DIMENSIONS

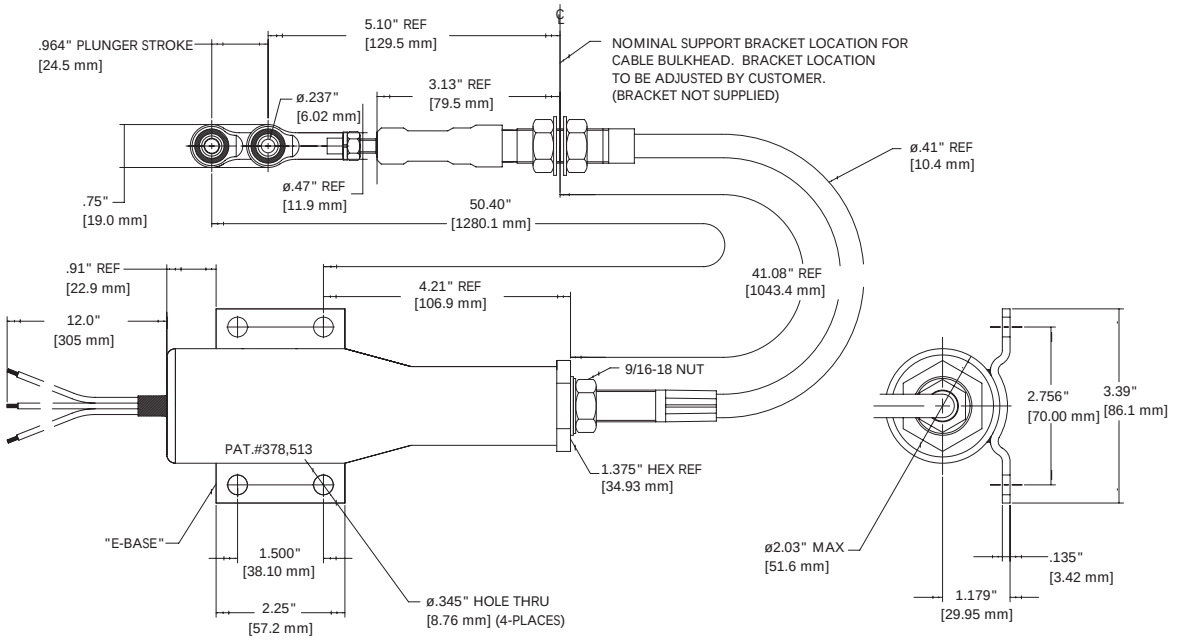

NOTE: Minimum bend radius for optimum cable life is 5" (127 mm)

Specifications:

At rated voltage, 68˚F (20˚C)
and .964" (24.5 mm) stroke

	12 Vdc	24 Vdc
Voltage		
Pull Current	61.8 A	39.0 A
Hold Current	0.85 A	0.46 A
Pull Force	29 lbs (129 N)	
Hold Force	41 lbs (182 N)	
Cable Length	41.08" (1043.4 mm)	
Total Length	50.4" (1280.1 mm)	

Force vs. Stroke

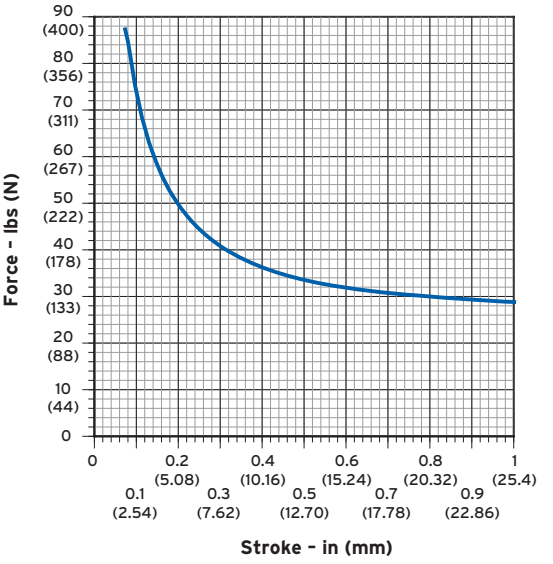

Specifications and dimensions are for reference only.

Notes

Single Coil Solenoids





Features:

Single coil solenoids are typically designed for continuous duty, with single coil performing both the pull and hold function for the solenoid.

Solenoid Selection Guide

Single Coil Model No.	Direction Pull	Push	Start Force	Hold Force	Stroke	Current
1000S						
12 Vdc	√		0.6 lbs (2.7 N)	4.0 lbs (17.8 N)	0.17" (4.3 mm)	0.7 A
24 Vdc	√		1.4 lbs (6.2 N)	5.0 lbs (22.2 N)	0.17" (4.3 mm)	2 A
1510S						
12 Vdc	√		3.6 lbs (16.0 N)	9.8 lbs (43.6 N)	0.5" (12.7 mm)	4.7 A
24 Vdc	√		3.6 lbs (16.0 N)	9.8 lbs (43.6 N)	0.5" (12.7 mm)	2.4 A

1000S Series Locking Solenoid

Heavy-duty locks designed for side-load resistance in hydraulic or mechanical applications. Plunger can withstand 1500 pounds of side load in the de-energized position.



Features:

- Single coil construction for simple electrical interface
- Hardened, stainless steel pin resists high shear load and increases fatigue resistance
- Nickel plated plunger ensures smooth, reliable operation, as well as corrosion and wear resistance
- Protective brass liner plunger bore provides longer operating life
- Rugged construction allows for operation under the most severe temperature and vibration conditions
- Easy installation—no brackets or linkages necessary

Order Information:

ORDER NO.	Model
SA-4971	Continuous
SA-4972	PWM

E.E.C. Directive Compliance: All parts supplied by Woodward Products are classified as components, and therefore are not "CE" marked. Please contact factory direct for details on specific product compliance with 89/336/EEC and 89/392/EEC directives.

1000S Series Locking Solenoid

DIMENSIONS

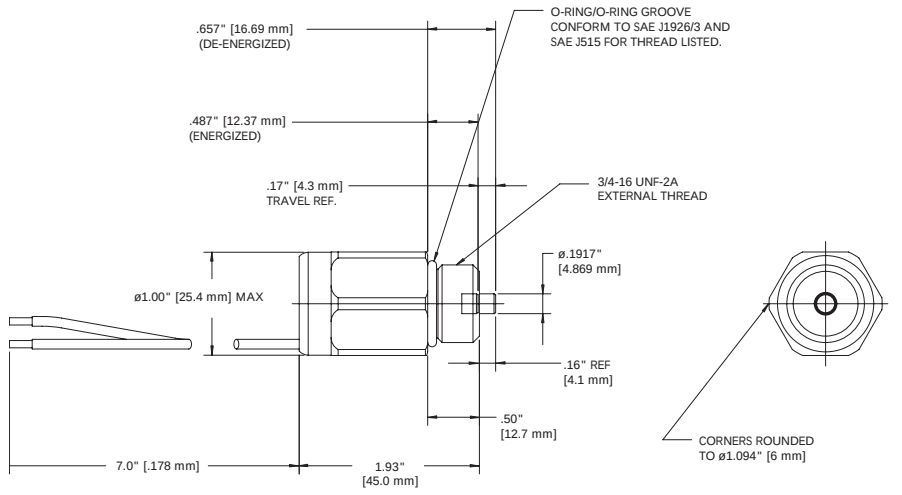

Specifications:	SA-4971	SA-4972
Rated Voltage	12 VDC	12 VDC
Rated Temperature	68˚F (20˚C)	68˚F (20˚C)
Temperature Range	-40˚F to + 185˚F (-40˚C to +85˚C)	-40˚F to + 235˚F (-40˚C to +113˚C)
Rated Stroke	0.17" (4.32 mm)	0.17" (4.32 mm)
Pull Current	100% duty @ 0.7 A	2 A max for 0.2 sec
Hold Current	100% duty @ 0.7 A	PWM 1.0 A average
Duty Cycle	100% @ 15.5 VDC max and 185˚F (85˚C)	15% @ 16 VDC
Pull Force	Solenoid must pull in plunger against return spring at 9.5 VDC and 320˚F (160˚C) coil temperature, with no side load on plunger pin	Solenoid must pull in plunger against return spring at 9.5 VDC and 235˚F (113˚C) within 200 msec, with no side load on plunger pin
Hold Force	Solenoid must hold in plunger against return spring at 9.5 VDC and 320˚F (160˚C) coil temperature	Solenoid must hold in plunger against return spring at 16 VDC, 15% duty cycle, 1000 Hz PWM signal, and 235˚F (113˚C)
Pull Coil Resistance	17.8 ohms ± 10%	5.55 ohms ± 5%

Specifications are for reference only.

1510S Series

Typically designed for continuous duty, with single coil performing both the pull and hold function for the solenoid.



Features:

- Continuous duty operation
- Hard chrome plated plunger for smooth, reliable, wear-resistant operation
- Brass liner plunger bore for long life
- Corrosion resistant plated steel housing and mounting base/flange
- Potted coil construction
- Variety of options for mounting bases/flanges, plungers, terminations, boots, and springs
- 100% inspected and factory tested

Order Information:

ORDER NO.	Model	Termination
SA-4741	0151	Leads

1510S Standard Force Curve

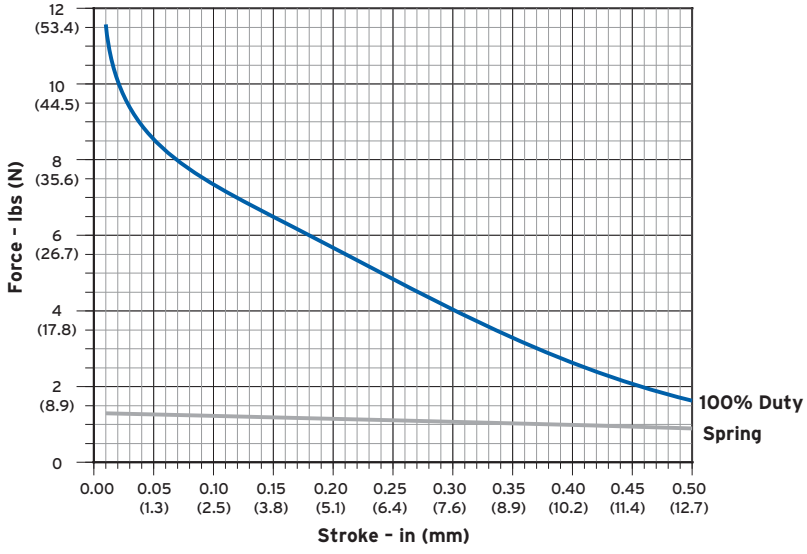

E.E.C. Directive Compliance: All parts supplied by Woodward Products are classified as components, and therefore are not "CE" marked. Please contact factory direct for details on specific product compliance with 89/336/EEC and 89/392/EEC directives.

1510S Series

SA-4741

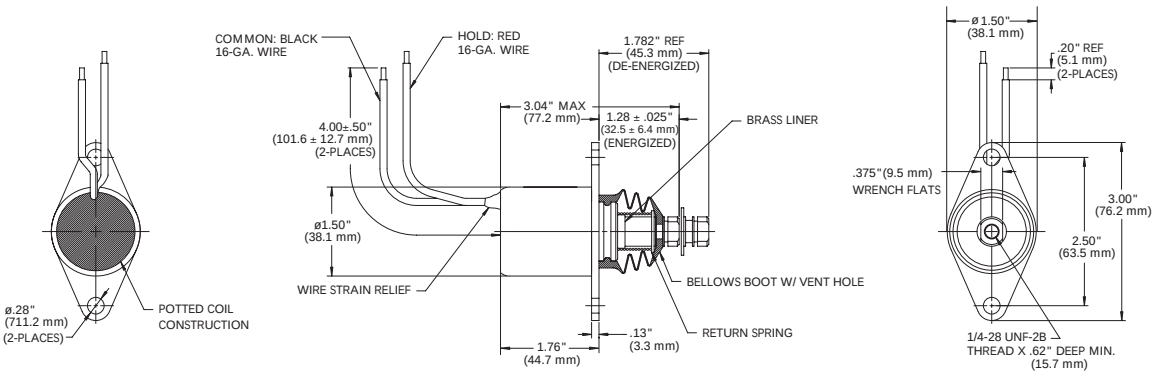

Specifications:

Rated Voltage	12 VDC
Rated Current	4.7 A
Rated Temperature	68˚F (20˚C)
Temperature Range	-20˚F to +250˚F (-29˚C to +121˚C)
Nominal Rated Stroke	0.5" (12.7 mm)
Pull Force	Must pull in against return spring at 9 VDC and 100˚F (38˚C) or 2.25 lbs min. (10 N) at rated voltage
Hold Force	Must hold return spring at 9 VDC and 100˚F (38˚C) or 8 lbs (35.6 N) at rated voltage
Nominal Spring Return	
De-energized:	1.16 ± 0.16 lbs (5.16 ± 0.71 N)
Energized:	1.56 ± 0.25 lbs (6.94 ± 1.11 N)
Pull Coil Resistance	2.53 ohms ± 10%
Duty Cycle	Intermittent, 25% duty cycle, 5 minutes maximum ON time
Vibration	15 G's @ 50-500 Hz
Shock	200 G's, 0-peak @ 21 Hz

Specifications are for reference only.

Notes

Solenoid Control Electronics







Woodward's extensive line of solenoid protection products feature either external or internal electronics. Coil Commanders™ and pull coil timer modules (PCTMs) are externally attached to the solenoid to prevent overheating of the pull coil. ICE (Integrated Coil Electronics) and AICE (Advanced ICE) solenoids have built-in electronics that prevent overheating of the pull coil.

External Electronic Solenoid Controls





Coil Commanders™ and PCTM Protection Systems

Dual coil solenoids are constructed of two wound coils. The pull coil operates at high currents in order to provide maximum pull or push force. The hold coil retains the plunger in place after it has completed its stroke. After energizing, the pull coil must be turned off as soon as possible to prevent burnout. The protection modules energize the solenoid pull coil for approximately 1.0 second.

Woodward makes two types of externally controlled solenoid protection systems: Coil Commander™ modules and pull coil timer modules (PCTM).

Timer Module Basics

Coil Commander™ Modules

Coil Commanders time out a solenoid's high amperage pull coil within approximately 1.5 seconds. The in-line cylindrical tube design comes in 5-, 6-, and 7-wire SSR configurations:

5-Wire Module	When used with a 3-wire externally switched solenoid, the combined unit functions similarly to an internally switched solenoid without modification to existing wiring harness.
6-Wire Module	Provides a quick, easy fix to prevent burnout for externally switched installations that are connected to the "S" terminal on the starter.
7-Wire SSR Module	When used with a 4-wire externally switched solenoid, the combined unit functions similarly to an internally switched solenoid and eliminates the need for a separate solenoid relay.

Stand-alone units are lightweight and need no mounting brackets. Modules are also available with solenoid attached.

Maximum ON/OFF Duty Cycles for Coil Commander™ Modules

At de-rated conditions: 125% of rated voltage and 250˚F (121˚C)

	Continuous	Intermittent
12 Vdc	2 cycles/minute	4 cycles/minute for 5 minutes
24 Vdc	1 cycle/minute	3 cycles/minute for 5 minutes

PCTM Modules

These timers protect externally switched solenoids by limiting the pull coil ON time to 0.5 second. Use of a PCTM enhances solenoid performance by providing functionality of an internally switched solenoid but with greater durability and reliability.

Note: Coil Commanders and PCTM's will reduce the available pull coil voltage by approximately 0.5 to 1 volt.

5-Wire Coil Commander™

Provides the functionality of an internally switched solenoid when used with a 3-wire externally switched solenoid.



Features:

- Prevents solenoid burnout due to engine over cranking or misadjustment of linkage by limiting the pull coil ON time
- Potted and sealed solid-state electronics
- Separate mounting bracket not required
- Stand alone plug-in or factory assembled to solenoid
- Patented

Order Information:

Stand Alone Modules

ORDER NO.	Rated Voltage	Max. Current at 68˚F (20˚C)	Terminations To System Harness	Terminations To Solenoid
SA-4624-12	12 Vdc	70 A	Leads	Packard Weather Pack Housing No. 12020829
SA-4624-24	24 Vdc	40 A	Leads	Packard Weather Pack Housing No. 12020829
SA-4626-12	12 Vdc	70 A	Packard Weather Pack Housing No. 12020827	Packard Weather Pack Housing No. 12020829
SA-4626-24	24 Vdc	40 A	Packard Weather Pack Housing No. 12020827	Packard Weather Pack Housing No. 12020829
SA-4630-12	12 Vdc	70 A	Packard Weather Pack Housing No. 12010973	Yazaki Housing No. 7123-2137
SA-4634-12	12 Vdc	90 A	Packard Weather Pack Housing No. 12010973	Packard Weather Pack Housing No. 12020829
SA-4634-24	24 Vdc	60 A	Packard Weather Pack Housing No. 12010973	Packard Weather Pack Housing No. 12020829
SA-4686-12	12 Vdc	70 A	Leads	Leads
SA-4686-24	24 Vdc	40 A	Leads	Leads
SA-4687-12	12 Vdc	90 A	Leads	Leads
SA-4687-24	24 Vdc	60 A	Leads	Leads
SA-4822-12	12 Vdc	90 A	Metri-Pack 280 Series Housing No. 15300002	Packard Weather Pack Housing No. 12020829

Built-in Modules

Contact Woodward for factory assembled units

Minimum quantities required for non-standard configurations. Contact factory for details.

5-Wire Coil Commander™

TERMINATION CONNECTIONS

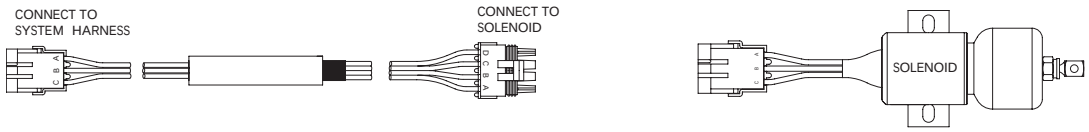

ELECTRIC SHUTOFF

Electric shutoff with dedicated relay for fuel solenoid

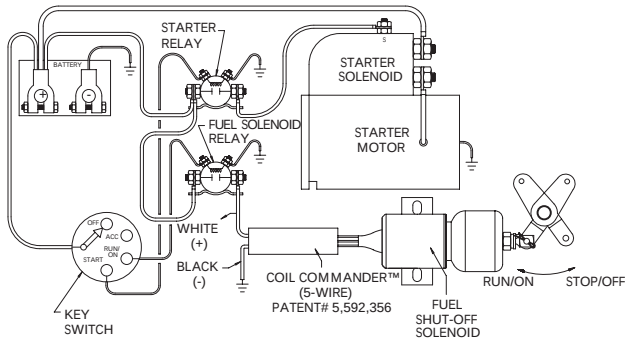

THROTTLE/CHOKE SOLENOID

Throttle/choke solenoid with dedicated relay for fuel solenoid

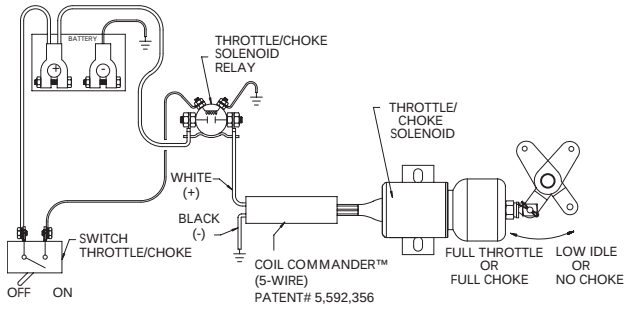

DIMENSIONS

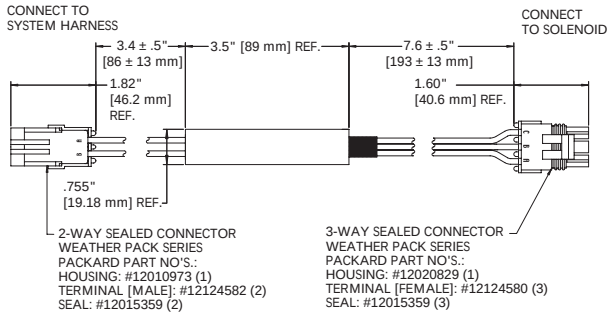

Note: Coil Commanders will reduce the available pull coil voltage by approximately 0.5 to 1 volt.

Specifications:

Temperature	-40˚F to +250˚F (-40˚C to +121˚C)	
Vibration	15 G's @ 15-2000 Hz	
Rated Voltage	12 Volt	24 Volt
Minimum Input Voltage @ 68˚ F (20˚C)	9 Vdc	18 Vdc
Rated Jump Start Voltage (<5 min)	24 Vdc	48 Vdc
Reverse Polarity Protection	None	
Weight	Approx. 4 oz. (113 g)	

Specifications are for reference only.

E.E.C. Directive Compliance: All parts supplied by Woodward are classified as components, and therefore are not "CE" marked. Please contact factory direct for details on specific product compliance with 89/336/EEC and 89/392/EEC directives.

6-Wire Coil Commander™

Plugs into existing externally switched solenoid installations without wiring modification when used with optional connectors. Works with installations connected to "S" terminal on starter.



Features:

- Prevents solenoid burnout due to engine over crank or misadjustment of linkage by limiting the pull coil ON time
- Potted and sealed solid-state electronics
- Separate mounting bracket not required
- Stand alone plug-in or factory assembled to solenoid
- Patented

Order Information:

Stand Alone Modules

ORDER NO.	Rated Voltage	Max. Current at 68°F (20°C)	Terminations To System Harness	Terminations To Solenoid
SA-4751	9-36 Vdc	86 A	Packard Weather Pack Housing No. 12020827	Packard Weather Pack Housing No. 12020829
SA-4759	9-36 Vdc	86 A	Leads	Leads
SA-4945*	9-36 Vdc	86 A	Yazaki Housing-Male No. 7122-2237-00	Yazaki Housing-Female No. 7123-2137
SA-5028	9-36 Vdc	86 A	Packard Metri-Pack 280 Housing No. 1530003	Packard Metri-Pack 280 Housing No. 12040977
SA-5160	9-36 Vdc	86 A	Yazaki Housing-Male No. 7122-2237-00	Yazaki Housing-Female No. 7123-2137

*For use with Kubota 1503ES solenoids

Built-in Modules

Contact Woodward for factory assembled units

Minimum quantities required for non-standard configurations. Contact factory for details.

TERMINATION CONNECTIONS

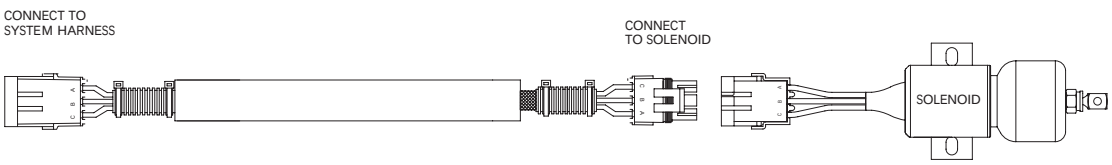

E.E.C. Directive Compliance: All parts supplied by Woodward are classified as components, and therefore are not "CE" marked. Please contact factory direct for details on specific product compliance with 89/336/EEC and 89/392/EEC directives.

6-Wire Coil Commander™

DIMENSIONS

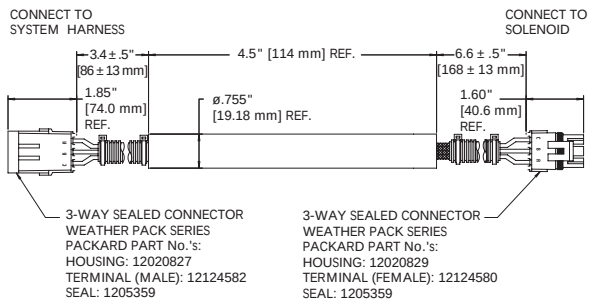

ELECTRIC SHUTOFF

Electric shutoff with dedicated relay for fuel solenoid

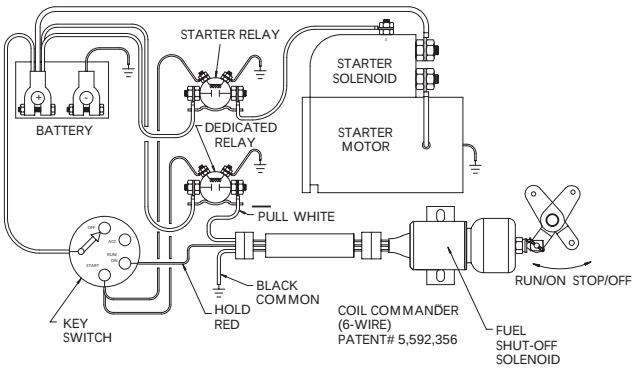

ELECTRIC SHUTOFF W/ STARTER MOTOR

Solenoid shown with Coil Commander wired to starter. ***This method requires approval from the starter motor manufacturer.***

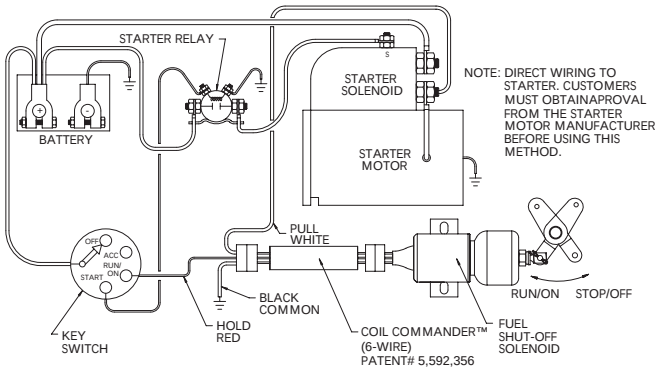

RECOMMENDED CONNECTION

Connection of solenoid to "S" terminal is acceptable with 6-wire Coil Commander.

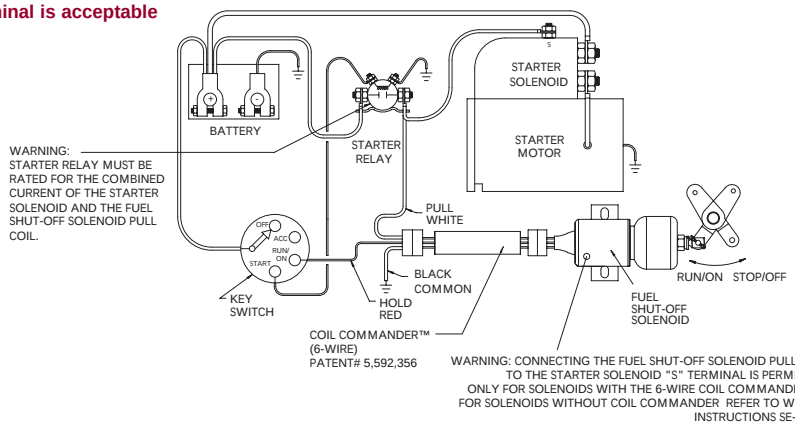

NON-RECOMMENDED CONNECTION

Connection of solenoid to "S" terminal is not recommended.

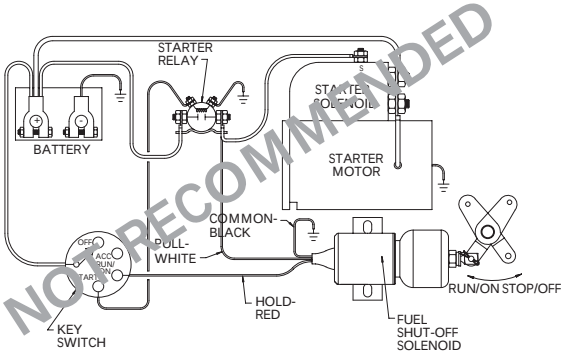

Note: Coil Commanders will reduce the available pull coil voltage by approximately 0.5 to 1 volt.

Specifications:

Temperature	-40˚F to +250˚F (-40˚C to +121˚C)	
Vibration	15 G's @ 15-2000 Hz	
Rated Voltage	12 Volt	24 Volt
Minimum Input Voltage @ 68˚F (20˚C)	9 Vdc	18 Vdc
Rated Jump Start Voltage (1 cycle/min for 10 min)	24 Vdc	36 Vdc
Reverse Polarity Protection	None	
Weight	Approx. 4 oz. (113 g)	

Specifications are for reference only.

7-Wire SSR Coil Commander™

Provides the functionality of an internally switched solenoid when used with a 4-wire externally switched solenoid. Eliminates the need for a separate solenoid relay.



Features:

- Prevents solenoid burnout due to engine over cranking or misadjustment of linkage by limiting the pull coil ON time
- Potted and sealed solid-state electronics
- Separate mounting bracket not required
- Stand alone plug-in or factory assembled to solenoid
- Patented

Order Information:

Stand Alone Modules

ORDER NO.	Rated Voltage	Max. Current @ 68˚F (20˚C)	Terminations To System Harness	Terminations To Solenoid
SA-4690-12	12 Vdc	70 A	Leads	Leads
SA-4690-24	24 Vdc	40 A	Leads	Leads
SA-4691-24	24 Vdc	60 A	Leads	Leads
SA-4727-12	12 Vdc	86 A	Packard Weather Pack Housing No. 12020827	Packard Weather Pack Housing No. 12020832
SA-4727-24	24 Vdc	56 A	Packard Weather Pack Housing No. 12020827	Packard Weather Pack Housing No. 12020832

Built-in Modules

Contact Woodward for factory assembled units.

Minimum quantities required for non-standard configurations. Contact factory for details.

E.E.C. Directive Compliance: All parts supplied by Woodward are classified as components, and therefore are not "CE" marked. Please contact factory direct for details on specific product compliance with 89/336/EEC and 89/392/EEC directives.

7-Wire SSR Coil Commander™

TERMINATION CONNECTIONS

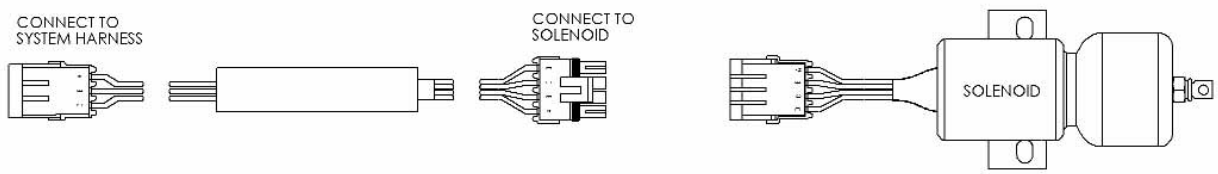

SSR ELECTRIC SHUTOFF

SSR electric shutoff for use with externally switched solenoids and to replace or eliminate a second solenoid relay

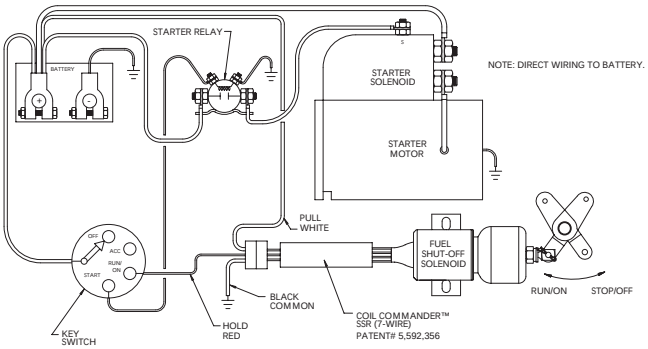

SSR THROTTLE/CHOKE SOLENOID

SSR throttle/choke solenoid eliminates need for mechanical relay

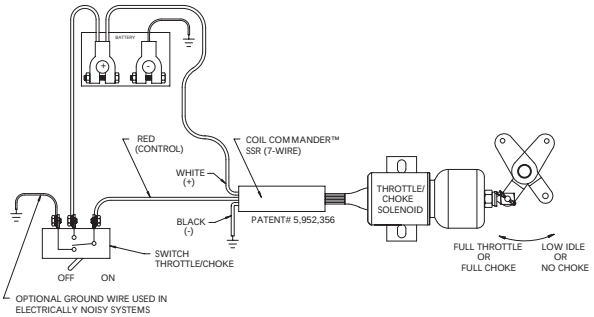

DIMENSIONS

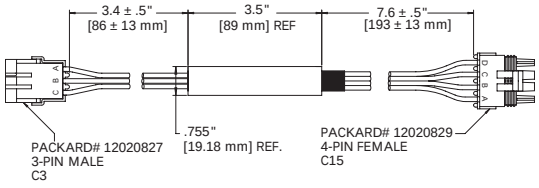

Note: Coil Commanders will reduce the available pull coil voltage by approximately 0.5 to 1 volt.

Specifications:

Temperature	-40˚F to +250˚F (-40˚C to +121˚C)	
Vibration	15 G's @ 15-2000 Hz	
Rated Voltage	12 Volt	24 Volt
Minimum Input Voltage @ 68˚F (20˚C)	9 Vdc	18 Vdc
Rated Jump Start Voltage (<5 min)	24 Vdc	48 Vdc
Reverse Polarity Protection	None	
Weight	Approx. 4 oz. (113 g)	

Specifications are for reference only.

PCTM Modules

Pull coil timer modules protect externally switched solenoids by limiting the pull coil ON time. Use of a PCTM enhances solenoid performance by providing functionality of an internally switched solenoid but with greater durability and reliability.



Features:

- 3- and 6-wire configurations for externally switched solenoids
- Can be mounted in any orientation or location
- Potted and sealed solid-state electronics
- Corrosion resistant

Order Information:

ORDER NO.	Wire Configuration	Rated Voltage	Terminations To System Harness	Terminations To Solenoid
SA-4092-12	3-Wire	12 Vdc	Leads	Leads
SA-4092-24	3-Wire	24 Vdc	Leads	Leads
SA-4094-12	3-Wire	12 Vdc	Packard Weather Pack Housing No. 12020827	Packard Weather Pack Housing No. 12020827
SA-4094-24	3-Wire	24 Vdc	Packard Weather Pack Housing No. 12020827	Packard Weather Pack Housing No. 12020827
SA-4220-12	6-Wire	12 Vdc	Leads	Leads
SA-4220-24	6-Wire	24 Vdc	Leads	Leads
SA-4222-12	6-Wire	12 Vdc	Packard Weather Pack Housing No. 12010717	Packard Weather Pack Housing No. 12015793
SA-4222-24	6-Wire	24 Vdc	Packard Weather Pack Housing No. 12010717	Packard Weather Pack Housing No. 12015793
SA-4224-12	6-Wire	12 Vdc	Leads	Packard Weather Pack Housing No. 12020827
SA-4224-24	6-Wire	24 Vdc	Leads	Packard Weather Pack Housing No. 12020827

Minimum quantities required for non-standard configurations. Contact factory for details.

E.E.C. Directive Compliance: All parts supplied by Woodward are classified as components, and therefore are not "CE" marked. Please contact factory direct for details on specific product compliance with 89/336/EEC and 89/392/EEC directives.

PCTM Modules

3-Wire Pull Coil Timer Module

DIMENSIONS

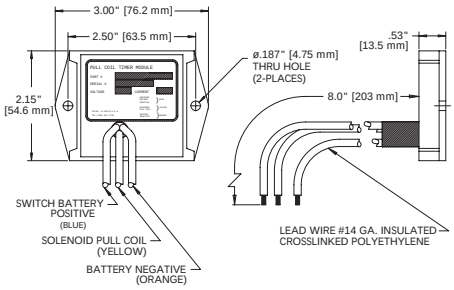

WIRING DIAGRAM

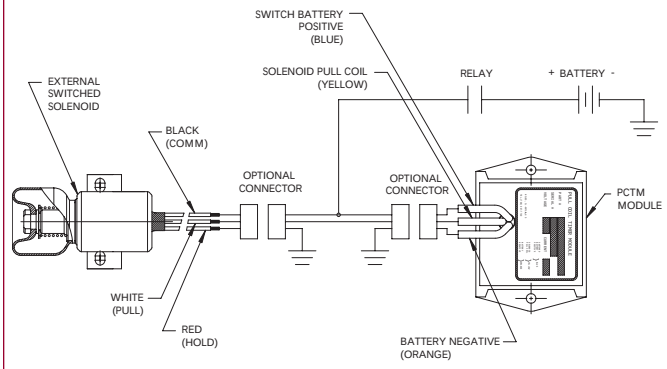

6-Wire SSR Pull Coil Timer Module

DIMENSIONS

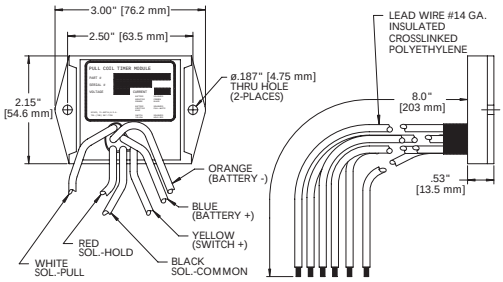

WIRING DIAGRAM

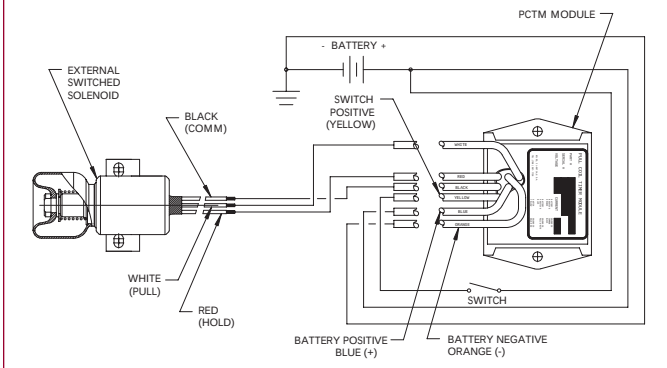

Note: PCTM's will reduce the available pull coil voltage by approximately 0.5 to 1 volt.

Specifications:

Temperature	-40˚F to +185˚F (-40˚C to +85˚C)
Input Voltage	12 Vdc (30 Vdc jump start) 24 Vdc (57 Vdc jump start)
Pull Current	70 A @ 12 Vdc 56 A @ 24 Vdc
Vibration	15 G's @ 15-2000 Hz
Maximum Cycles	3 cycles/minute continuous
Energized Time	0.5 seconds

Specifications are for reference only.

Internal Electronic Solenoid Controls





Integrated Coil Electronic Solenoids

Ideal for custom applications, Woodward's Integrated Coil Electronics (ICE and Advanced ICE) solenoids have built-in electronics that prevent overheating of the pull coil. The electronics on both products are totally encapsulated onto the solenoid to ensure reliability in the harshest environments. And, both feature reverse polarity protection.



Integrated Coil Electronics (ICE)

For Dual Coil Solenoids

A printed circuit board mounted onto a dual coil solenoid provides a timer circuit for the pull coil. The PCB functions as an internal timer that switches the pull coil ON and OFF so that the solenoid does not burn itself out.

Features:

- Totally encapsulated PCB ensures reliability in the harshest environments
- Compact design for usage in tight spaces
- Reverse polarity protected

DIMENSIONS

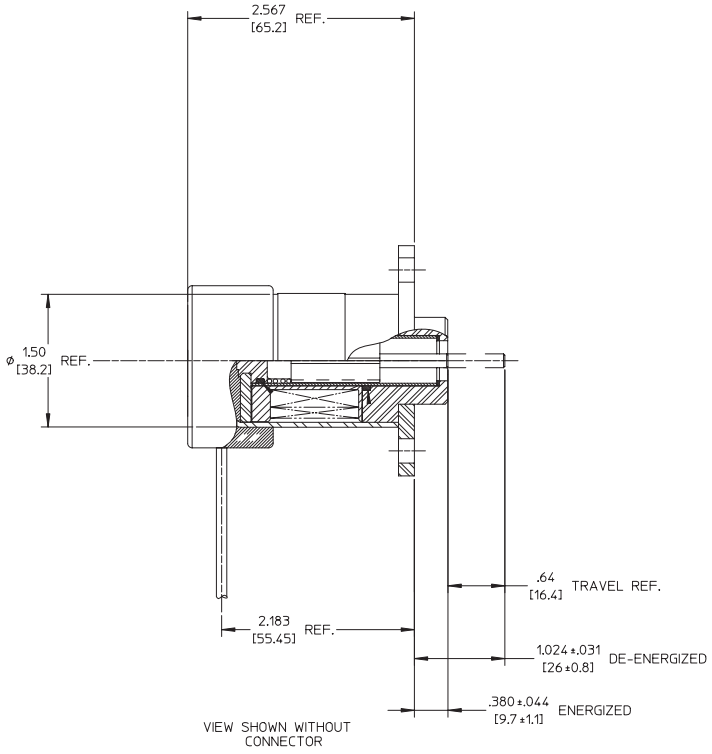

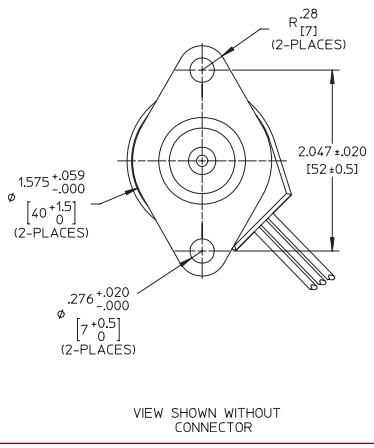

Dimensions in brackets are millimeters.

Advanced Integrated Coil Electronics (AICE)

For Single Coil Solenoids



Electronics integrated into a single coil solenoid control the solenoid's current to provide high initial starting force and a constant hold force. The microprocessor encapsulated onto the solenoid calculates the pull time and then generates a pulse width modulated signal to create the hold coil function for single coil solenoids. Under this reduced current, the hold force of the plunger is held constant over input voltage and temperature ranges.

Features:

- Totally encapsulated electronics operate on PWM signals to regulate current
- Compact design for usage in tight spaces
- Reverse polarity protected

DIMENSIONS

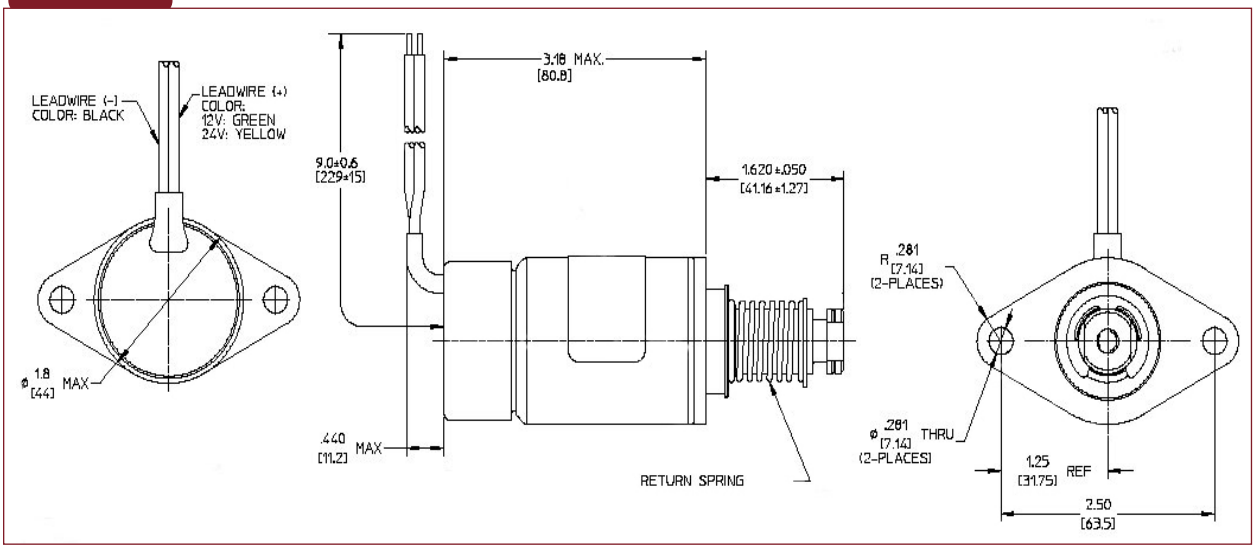

Dimensions in brackets are millimeters.

Notes

Hardware

- Solenoid spring swivel
- In-line swivel
- Solenoid end cap
- Clevis yoke
- Clevis yoke bead chain assemblies
- PVC terminal protector
- Spherical rod end
- Connectors



Solenoid Spring Swivel

- Provides a 12° rotational movement to compensate for minor misalignment between solenoid and linkage, and allows up to .25" overtravel
- Male and female connectors rotate 360° for easy installation
- "L" dimension 3.0" when using ¼-28 or M6 male; 3.25" when using 5/16-24 male

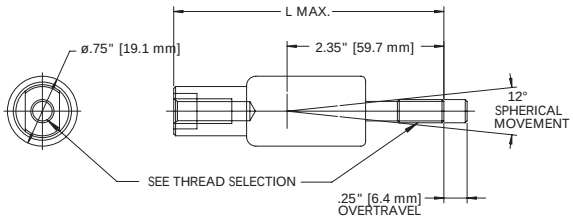

ORDER NO.	Solenoid Model No.	Optional Return Spring
SA-3157 - ( ) ( )	1502–1504–1753	No
SA-3158 - ( ) ( )	1502–1504–1753	Yes
SA-3159 - ( ) ( )	1751–2001–2003	No
SA-3160 - ( ) ( )	1751–2001–2003	Yes

Male End of Swivel Thread Selection: **A** ¼–28, **C** 5/16–24, **E** M6

Female End of Swivel Thread Selection: **B** ¼–28, **D** 5/16–24, **F** M6

When you order: You will need to provide the male and female swivel thread selection

In-line Swivel

Compensates for possible misalignment between rigid linkage and solenoid plunger

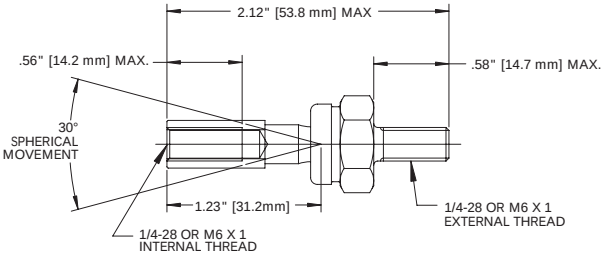

ORDER NO.	Mounting Thread
SA-4049	¼–28
SA-4050	M6 x 1

Solenoid End Cap

- Hypalon® rubber end cap thoroughly seals solenoid from contaminants such as water, oil, chemicals and salts
- Sized for 1500, 1750, and 2000 series solenoids

ORDER NO.	Solenoid Model No.
SE-5601	1500 Series
SE-5614	1750 Series
SE-5559	2000 Series

®Hypalon is a registered trademark of DuPont Dow Elastomers.

Clevis Yoke

For use in customer designed linkage assemblies

ORDER NO.	Mounting Thread
SA-0008-A	¼–28

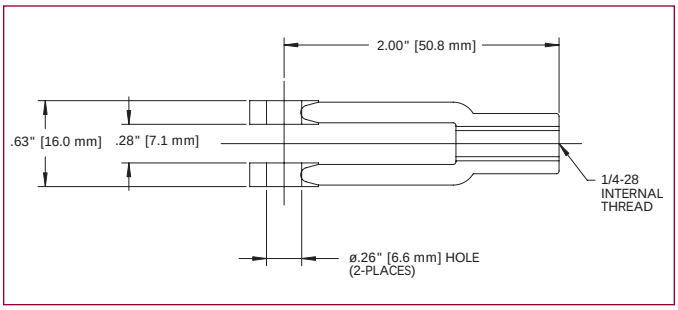

Clevis Yoke Bead Chain Assemblies

Used whenever a flexible connection is required, such as pulling a throttle lever on a gasoline engine

ORDER NO.	Mounting Thread
SA-0293-B	¼–28

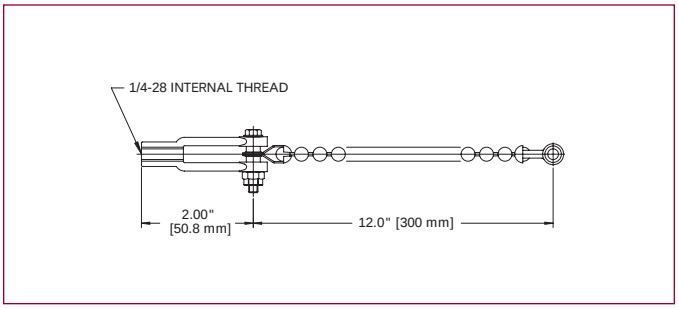

PVC Terminal Protector

- For internally switched solenoids with terminals
- Fits over solenoid cap to protect terminals from accidental shorting
- Available in end or side termination

ORDER NO.	Termination
SA-2968	End
SA-2968-UK	Side

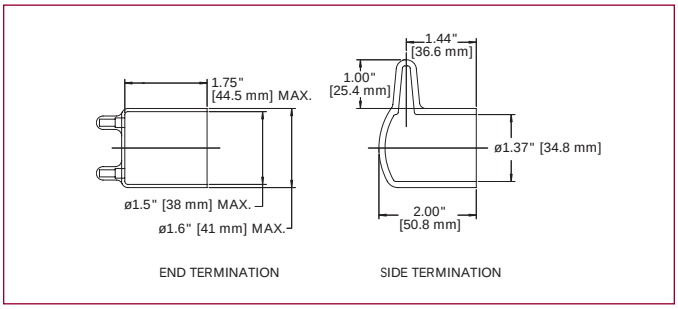

Spherical Rod End

- Heavy duty, low friction, nylon race ball joints for connecting solenoid linkage to fuel pump levers
- Available in male and female options

ORDER NO.	Body	Stud
SA-4280	Internal ¼–28	None
SA-4188	Internal ¼–28	External ¼–28
SA-4232	External ¼–28	External ¼–28

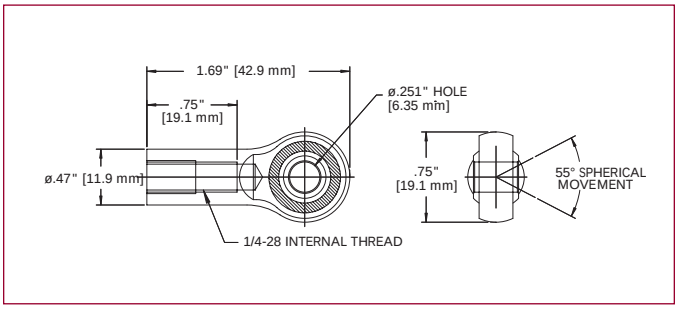

Connectors

- For externally switched solenoids with leads
- Special materials and seals are used to allow the connector to withstand extreme temperature and moisture conditions
- For ordering information contact Woodward

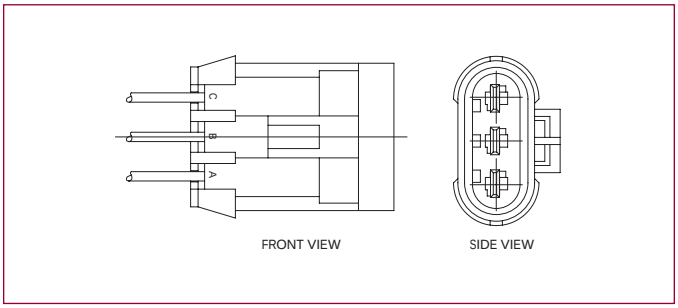

Shutdown Kits

Safe, dependable shutdown systems fit a range of engines and fuel injection pump governors. Designed for ease of installation and maintenance, kits contain solenoid and all mounting hardware for attachment to the governor housing.

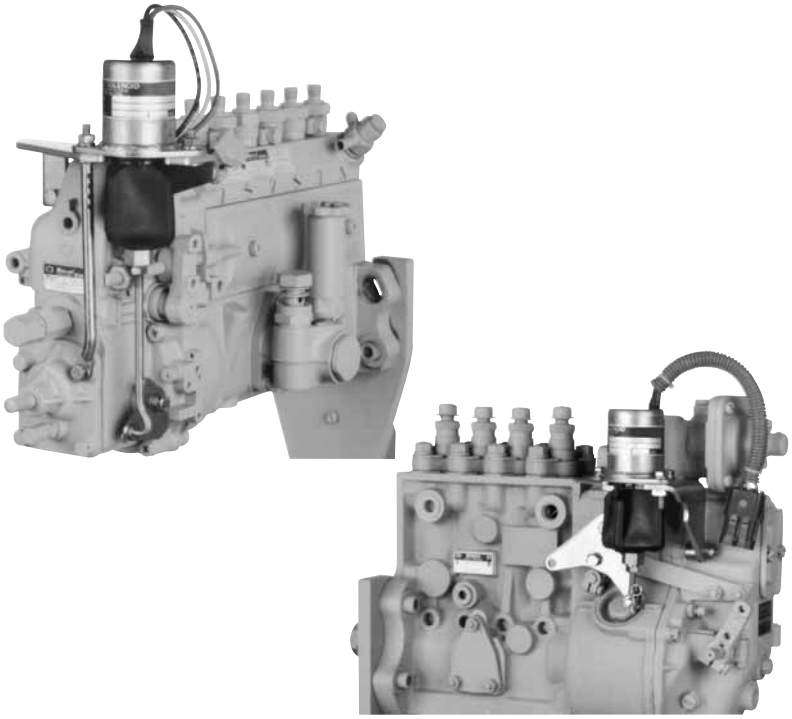

Features:

- Hold coil designed for continuous duty operation under the most severe temperature and vibration conditions
- Brass liner plunger bore for long life
- Plunger hard chrome plated for smooth, reliable, wear-resistant operation
- Plated steel solenoid, bracket, linkage, lever and hardware for corrosion resistance
- Available in 12 and 24 volt models
- Optional Packard Weather Pack, or Metri-Pack sealed connectors (RQV-K Bosch Kit includes Packard Weather Pack connector)
- Mounting hardware included for fast, easy installation
- Kits contain the properly selected solenoid and return spring for running and stopping engines under all conditions
- Solenoids are sized according to deration for hot temperature and low voltage

Kits Available:

- RQV-K Type Bosch Kit
- RSV Type Bosch Kit
- Kubota Kit 1A (62.2 mm series engines)
- Kubota Kit 3A (70 and 82 mm series engines)
- Mitsubishi L Series Kit
- RSV Type Zexel Nippondenso Kit

E.E.C. Directive Compliance: All parts supplied by Woodward are classified as components, and therefore are not "CE" marked. Please contact factory direct for details on specific product compliance with 89/336/EEC and 89/392/EEC directives.

Specifications:

Solenoid	3-wire externally switched (ES) solenoid Internally switched solenoid also available on Kubota and RSV-Bosch kits
Rated Voltage	12 or 24 Vdc
Ambient Temperature	-40˚F to +250˚F (-40˚C to +121˚C)
Weight	Approx. 3.0 lbs (1.4 kg)

Engine Series	Voltage	Pull Current	Hold Current
RQV-K Bosch	12 24	55 A 29 A	1.1 A 0.6 A
RSV Bosch	12 24	46 A 25 A	1.1 A 0.5 A
Kubota 1A (62.2 mm series)	12 24	33 A 18 A	0.8 A 0.4 A
Kubota 3A (70 & 82 mm series)	12 24	46 A 25 A	1.1 A 0.5 A
Mitsubishi L	12	46 A	1.1 A
RSV Zexel Nippondenso	12 24	55 A 29 A	1.1 A 0.6 A

Specifications are for reference only.

Shutdown Kits



RQV-K Bosch Kit

- Installs on a variety of engines using Bosch pumps with RQV-K governor
- 1752ES solenoid has built-in Packard Weather Pack connector (Housing No. 12020827)

ORDER NO.	Solenoid Model	Voltage
SA-4026-12	1752ES	12 Vdc
SA-4026-24	1752ES	24 Vdc

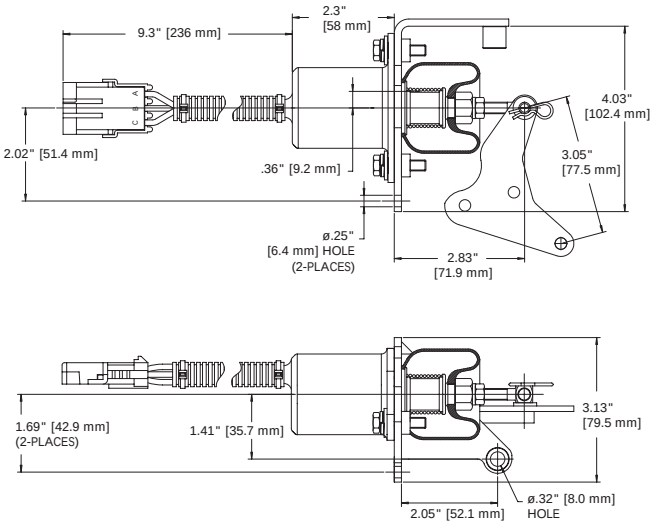

NOTE: Left-Hand Kit with 1752ES solenoid

Shutdown Kits



RSV Bosch Kit

- Installs on a variety of engines and Bosch Models A, MW, and P pumps with RSV governor
- Right- or left-hand mounting styles

ORDER NO. Right-Hand	Solenoid Model	Voltage
SA-3799-12	1751ES	12 Vdc
SA-3799-24	1751ES	24 Vdc
SA-3800-12	1751	12 Vdc
SA-3800-24	1751	24 Vdc

ORDER NO. Left-Hand	Solenoid Model	Voltage
SA-3742-12	1751ES	12 Vdc
SA-3742-24	1751ES	24 Vdc
SA-3765-12	1751	12 Vdc
SA-3765-24	1751	24 Vdc

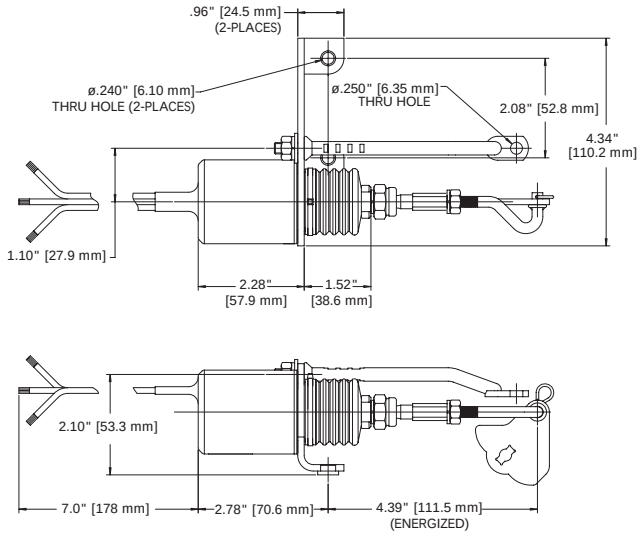

NOTE: Left-Hand Kit with 1751ES solenoid

Shutdown Kits



Kubota 1A Kit (62.2 mm series engines)

- Installs on Kubota 62.2 mm series engines
- Also available as hardware kit without 1753 solenoid

ORDER NO.	Solenoid Model	Voltage
SA-4268-12	1753	12 Vdc
SA-4269-12	1753ES	12 Vdc
SA-4270 (Hardware only)	—	—

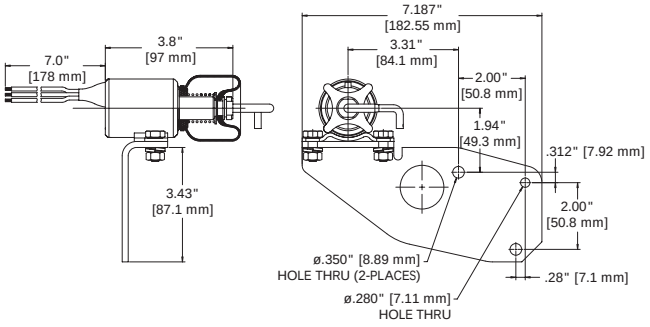

Shutdown Kits

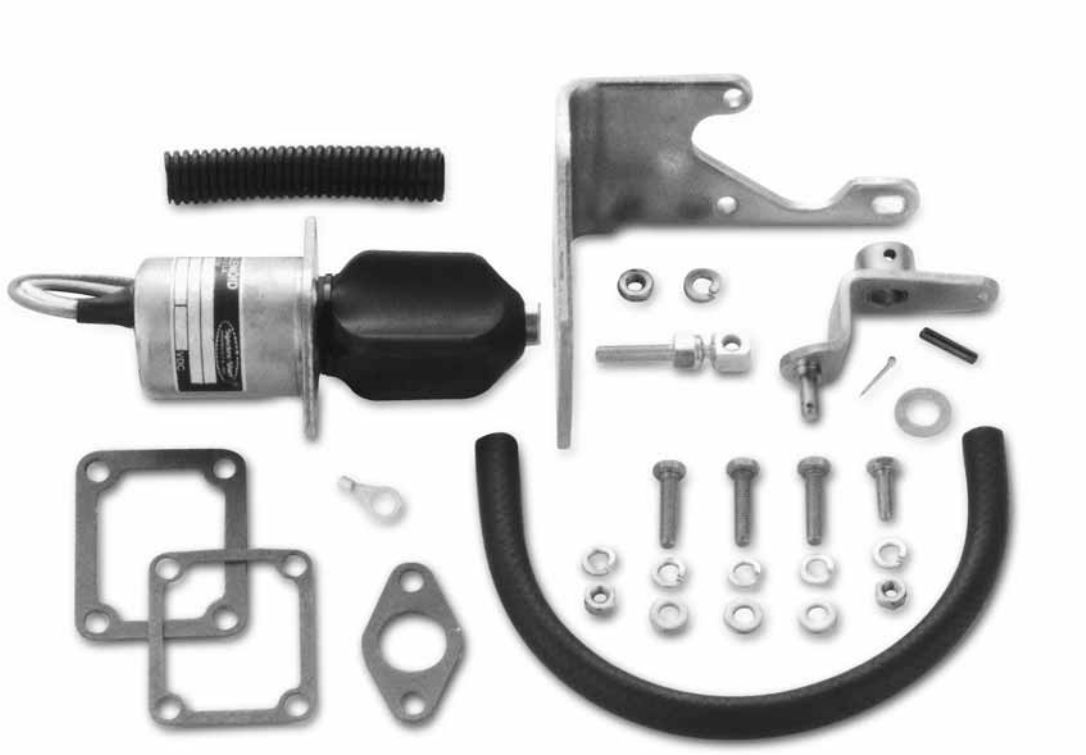

Kubota 3A Kit (70 & 82 mm series engines)

- Installs on Kubota 70 and 82 mm series engines
- Also available as hardware kit without 1751 solenoid

ORDER NO.	Solenoid Model	Voltage
SA-4259-12	1751	12 Vdc
SA-4260-12	1751ES	12 Vdc
SA-4260-24	1751ES	24 Vdc
SA-4264 (Hardware only)	—	—

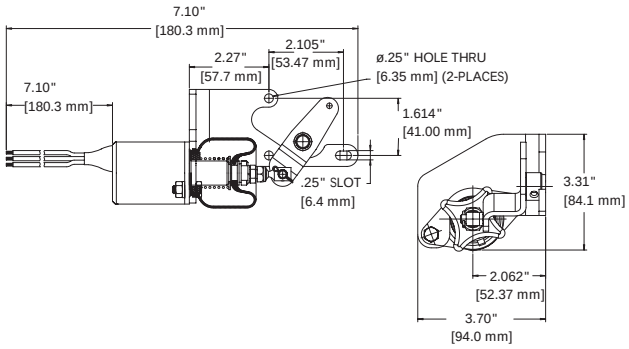

Shutdown Kits



Mitsubishi L Kit

- Installs on Mitsubishi "L" Series engines directly into pump with no external linkage

ORDER NO.	Solenoid Model	Voltage
SA-3725	1751ES	12 Vdc

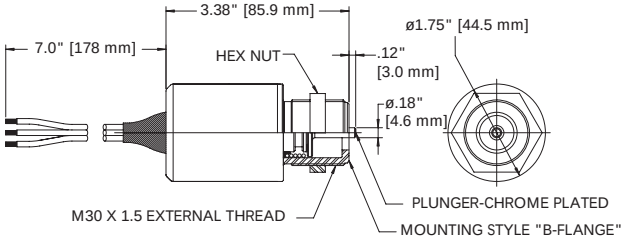

NOTE: 1751ES threaded solenoid with 30mm lock nut screws into back of pump

Shutdown Kits



RSV Zexel Nippondenso

- Installs on a variety of engines using Zexel or Nippondenso pumps with RSV governor
- Right- or left-hand mounting styles

ORDER NO. Right-Hand	Solenoid Model	Voltage
SA-3999-12	1752ES	12 Vdc
SA-3999-24	1752ES	24 Vdc

ORDER NO. Left-Hand	Solenoid Model	Voltage
SA-4014-12	1752ES	12 Vdc
SA-4014-24	1752ES	24 Vdc

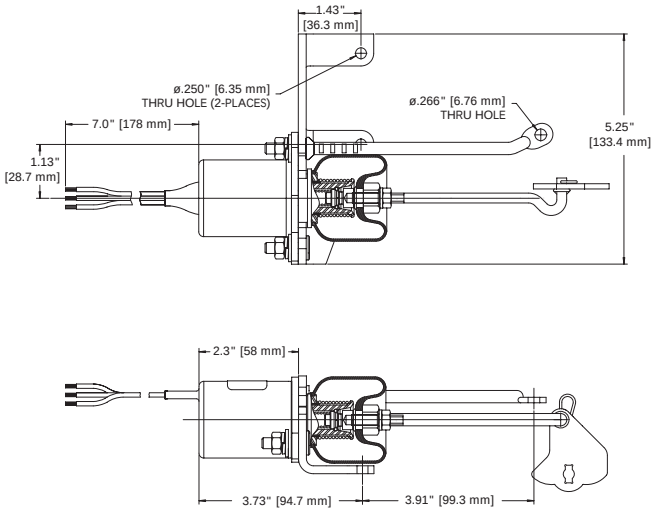

NOTE: Left-Hand Kit with 1752ES solenoid

Shutdown Solenoid Kit

Fuel shutdown solenoid mounts closely above the front gear housing behind the fan on Kubota D722 & Z482 engines.

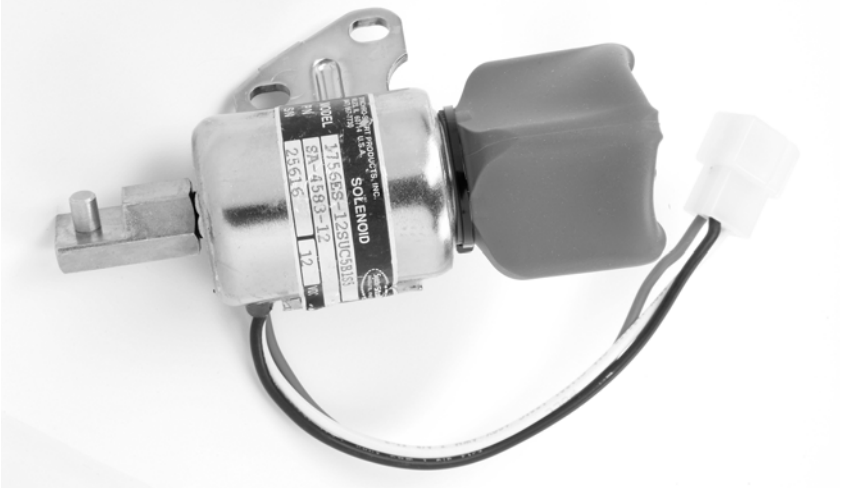

Features:

- Energized to run, fail-safe operation
- Hold coil designed for continuous duty operation under the most severe temperature and vibration conditions
- Brass liner plunger bore for long life
- Plunger hard chrome plated for smooth, reliable, wear-resistant operation
- Plated steel solenoid, bracket, linkage, lever and hardware for corrosion resistance
- Available in 12 and 24 volt models

Order Information:

ORDER NO.	Solenoid	Voltage
SA-4899-12	1756ES	12 Vdc
SA-4899-24	1756ES	24 Vdc

Kubota Shutdown Lever:

Engine must be equipped with proper shutdown lever in order to install the shutdown solenoid. Order appropriate part number from Kubota.

PART NO.	Engine Production Date*
16851-57720	Before April, 2001
16851-57723	After April, 2001

***Contact Kubota with engine serial number**

E.E.C. Directive Compliance: All parts supplied by Woodward are classified as components, and therefore are not “CE” marked. Please contact factory direct for details on specific product compliance with 89/336/EEC and 89/392/EEC directives.

Notes

WOODWARD

SOLENOIDS



Woodward has company-owned plants, subsidiaries, and branches, as well as authorized distributors and other authorized service and sales facilities throughout the world.

For the location nearest you, please visit www.woodward.com.

52132A